Alle Rechte vorbehalten/ *All rights reserved*

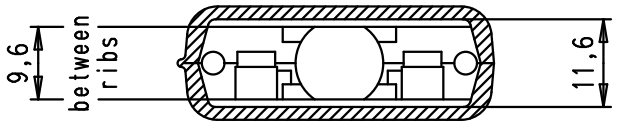

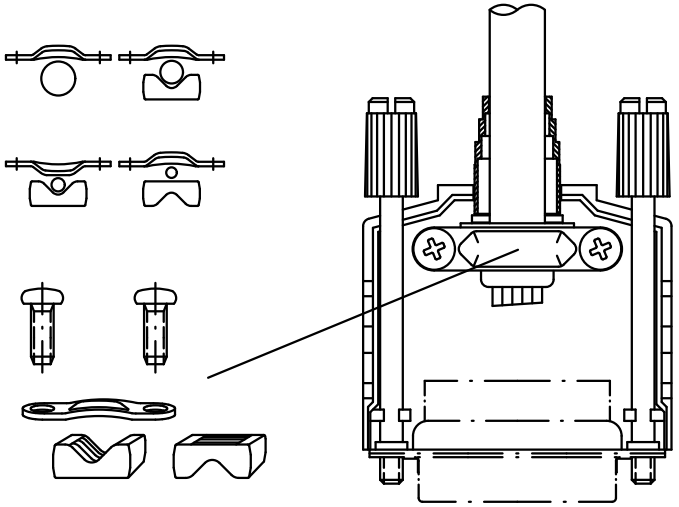

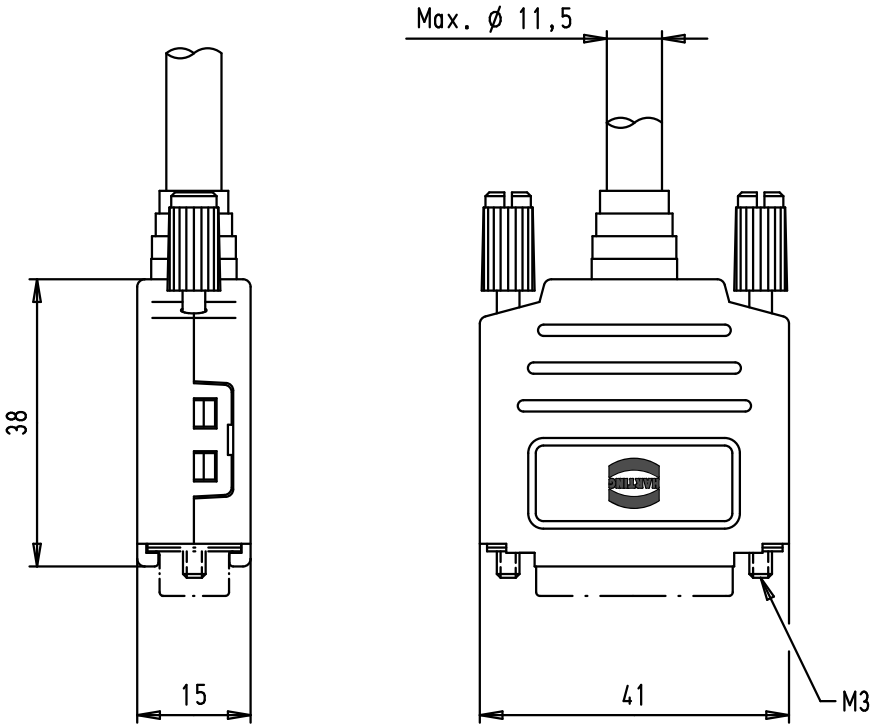

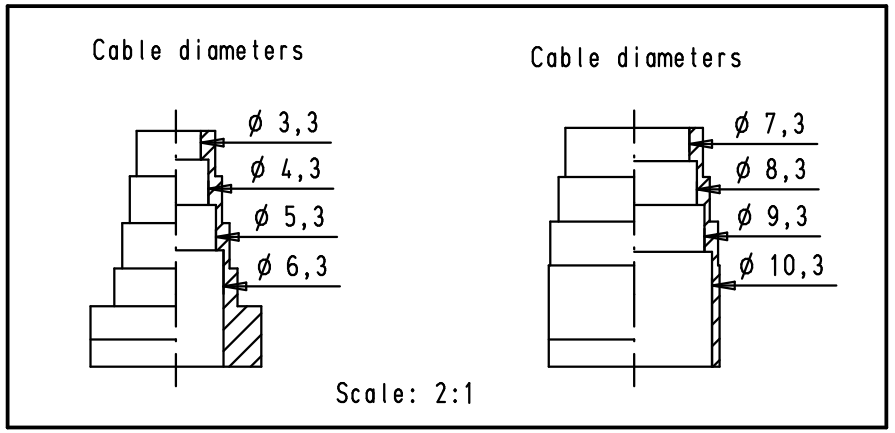

				Dat.	Name			
			Detail.	08/06/11	SD	All Dim. in mm Orig. Size DIN A 4	D-Sub, top entry hood with knurled screws, 15 poles, thermoplastic metallized	Maßstab/ *Scale* 1:1 2:1
			Insp.	08/06/11	JB			
			Stand.					
EC03320	08/06/11	SD	HARTING EURL F-95972 Paris				TB 09 67 015 0427	Blatt/ *Page* 1/1
Mod.	Dat.	Name					Sub.	