view without cover

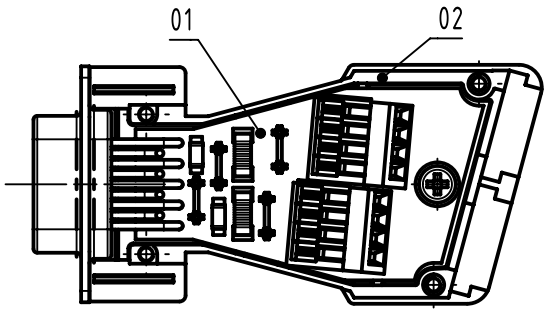

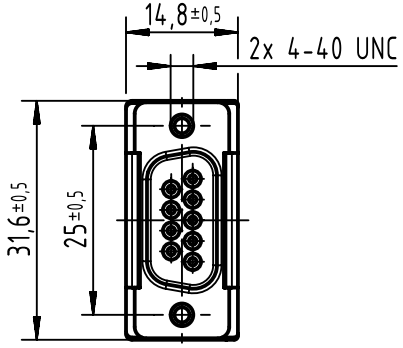

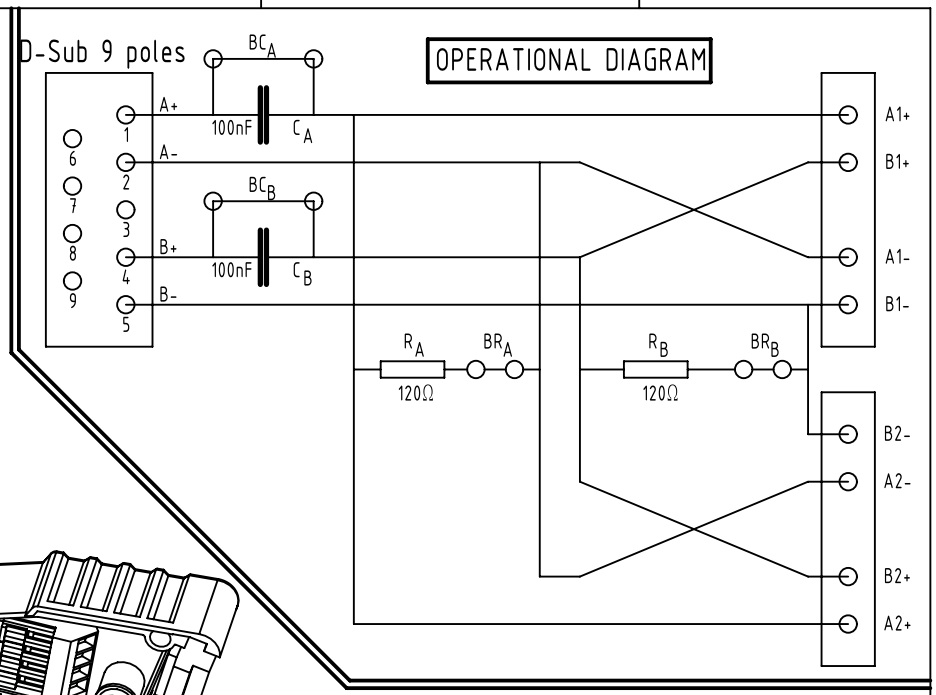

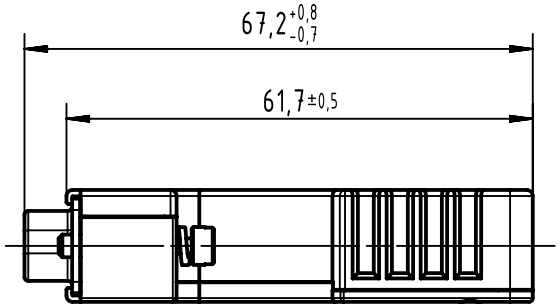

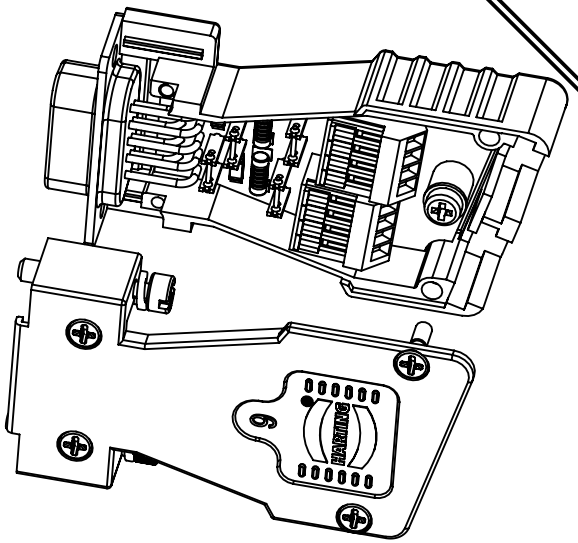

in set inclusive :

Number	Description
2	Crimp flange 6,0-7,0
2	Crimp ferrule 9,5-10,5
1	Blanking piece 9-37
1	label line A, B

6663 009 6028 170	PL2	Plated hood
6663 009 6028 777	PL2	Small batch
6663 009 6028	PL2	Standard batch
Part number	Performance level	Remark

All Dimensions in mm
Original Size DIN A4

Scale 1:1

Free size tol.

Ref.

Sub.

All rights reserved

Department EL PD

HARTING
D-32339 Espelkamp

Created by	Inspected by	Standardisation	Date	State
ZHUANGJ	LUOK	ROEBEN	2023-12-14	Final Release

Title: InduCom 9 MVB/WTB 4-40 UNC female

Doc-Key / ECM-Nr.
100075722/UGD/004/E
500000259982

Type: TB

Number: 66630096028

Rev.: E

Page: 1/1

A4