lightnet

Lightnet GmbH
Zollstockgürtel 65
50969 Köln / Germany
Tel.: +49 (0) 221 22 25 26-0
E-Mail: info@lightnet.de
www.lightnet.de

PLANK G4/P4 | SUSPENDED

1. MONTAGE UND INSTALLATION | MOUNTING AND INSTALLATION:

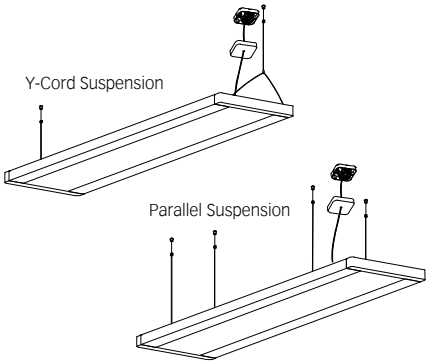

1. Bei allen Montagearbeiten Handschuhe tragen.
Use gloves when handling the fixture.

Y-Cord Suspension

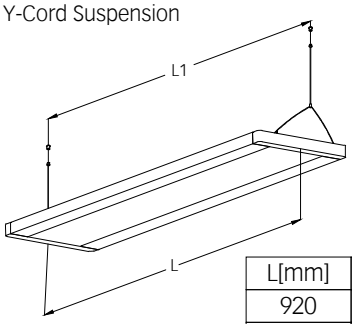

L2[mm]
141.5

L[mm]	L1[mm]
920	820
1210	1100
1500	1400
1800	1700

2. Montageöffnungen.
Installation openings.

Parallel Suspension

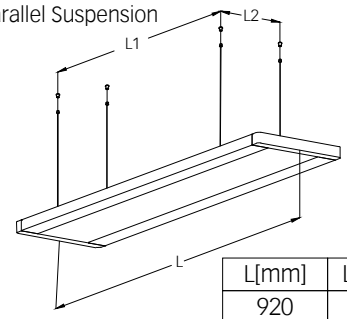

L2[mm]
171

L[mm]	L1[mm]
920	674
1210	964
1500	1254
1800	1554

3. Montageöffnungen.
Installation openings.

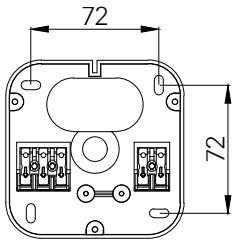

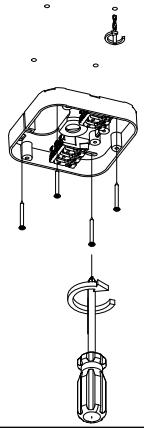

4. Leitungseinführung.
Cable entry point.

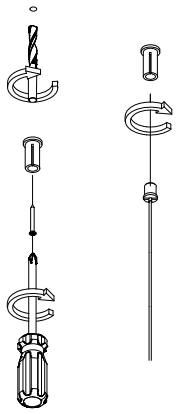

5.

Parallel Suspension

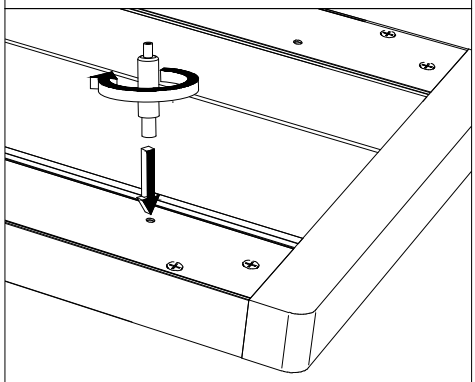

6.

Parallel Suspension

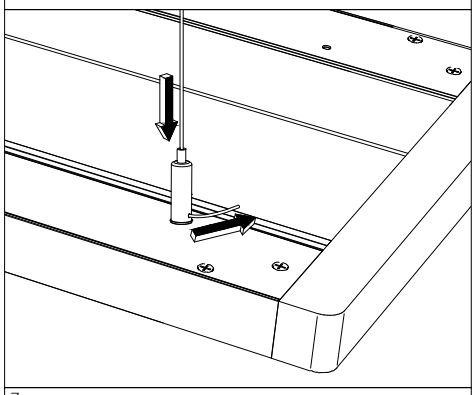

7.

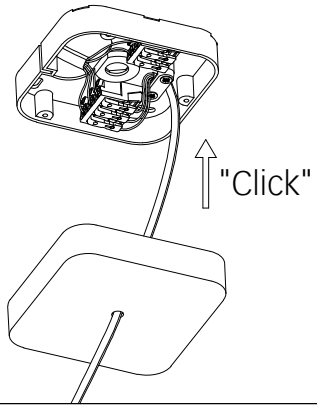

8.

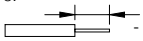

- min/max stripped wire length: 7mm-10mm

- max power supply cable: 1,5mm^2

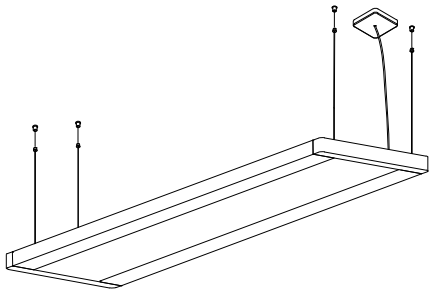

9.