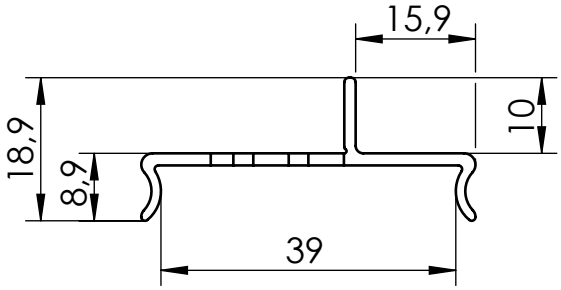

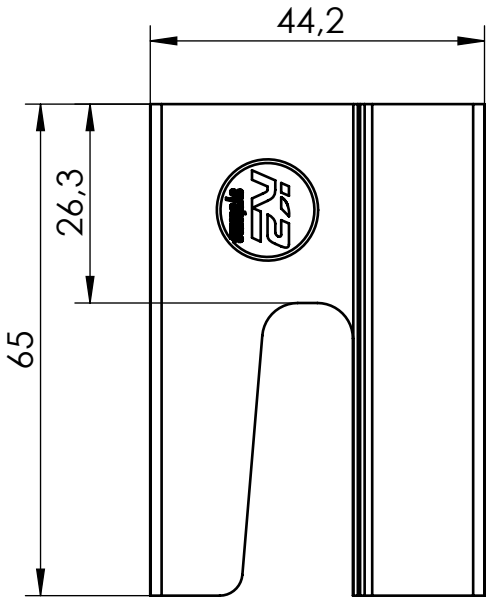

Isometric
1:1

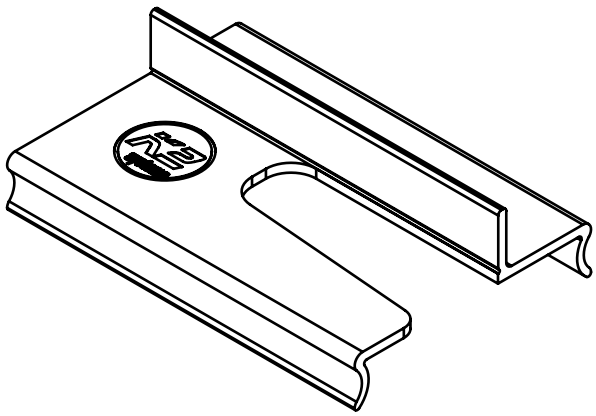

K2 Systems GmbH
Haldenstr. 1
71272 Renningen
Germany
+49 7159 42059-0

Designation:

Data sheet AddOn XS

	Name	Date	Material:		Item no.:	2004629	A4
Designed	A. Soumpalas	21.11.2024	EN AW 6063 T66				
Approved	V. Schütz	21.11.2024	Surface: mill finish		Drawing no.:	03-218-00	All dimensions in mm
Last change			Weight: ca. 16.2 g/pc	Scale: 1:1			Sheet 1 of 1

This drawing is the sole property of K2 Systems GmbH. It is protected by copyright and may only be copied, reproduced or distributed to a third party with explicit permission!