lightnet

Lightnet GmbH
Zollstockgürtel 65
50969 Köln / Germany
Tel.: +49 (0) 221 22 25 26-0
E-Mail: info@lightnet.de
www.lightnet.de

MIDPOINT C6 | 3-PHASE TRACK

GLOBAL

1. MONTAGE UND INSTALLATION | MOUNTING AND INSTALLATION:

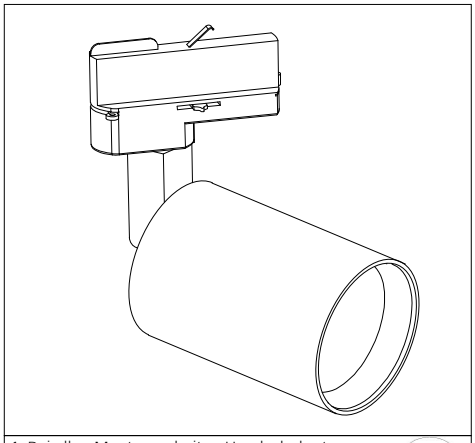

1. Bei allen Montagearbeiten Handschuhe tragen.
Use gloves when handling the fixture.

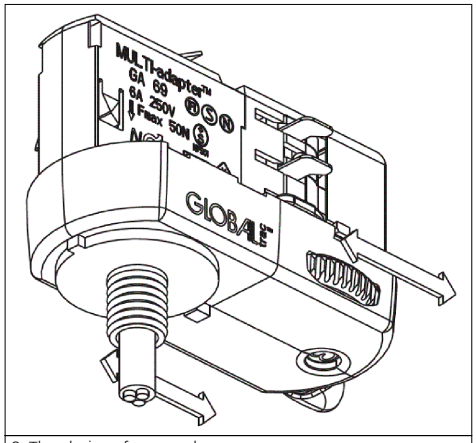

2. The choice of power phase.

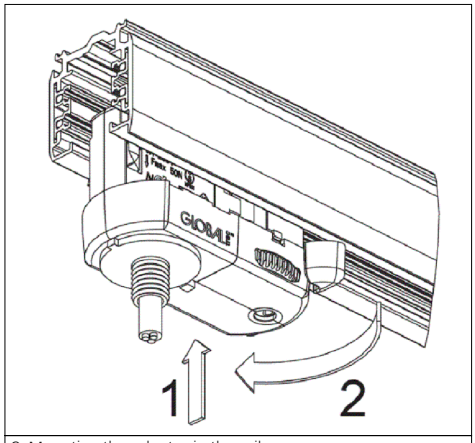

3. Mounting the adaptor in the rail.

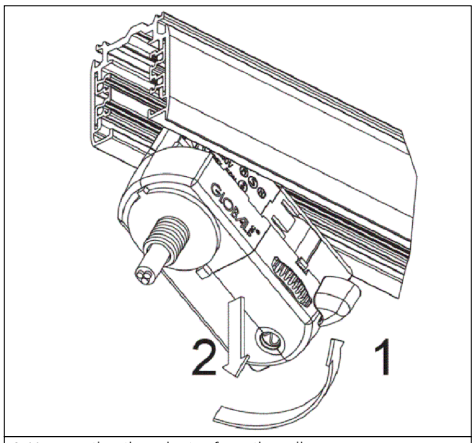

4. Unmounting the adaptor from the rail.

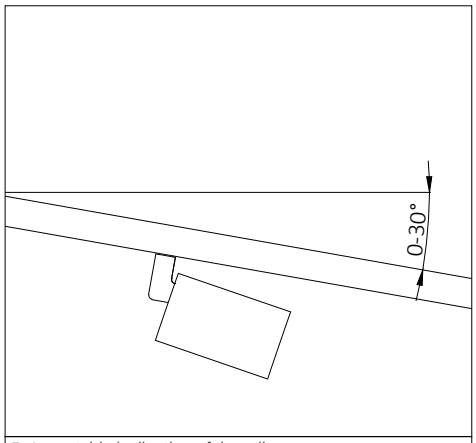

5. Acceptable inclination of the rail.

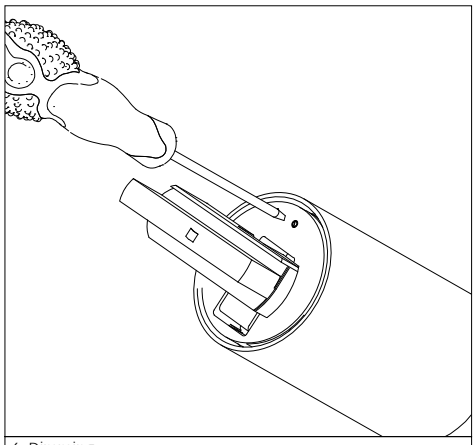

6. Dimming.
The knob is only on the luminaire in the case of a dimmable luminaire.