view without cover

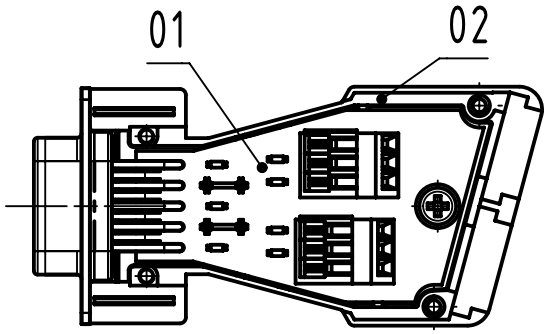

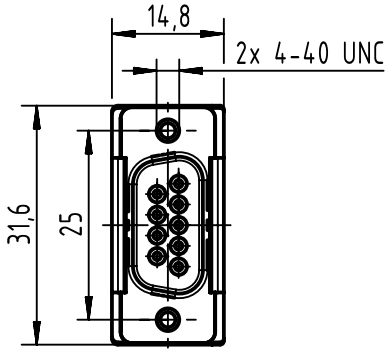

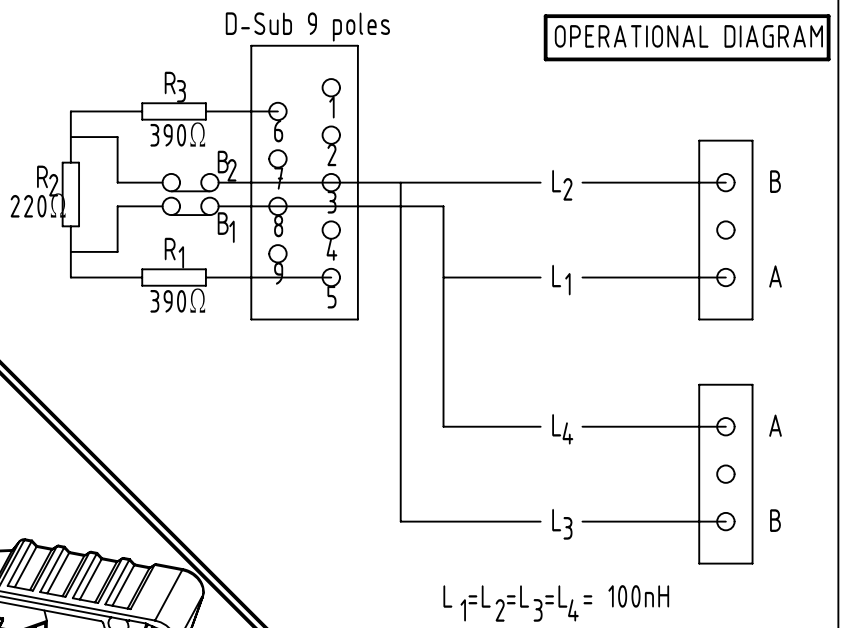

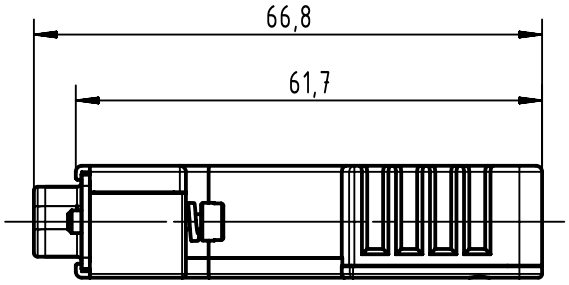

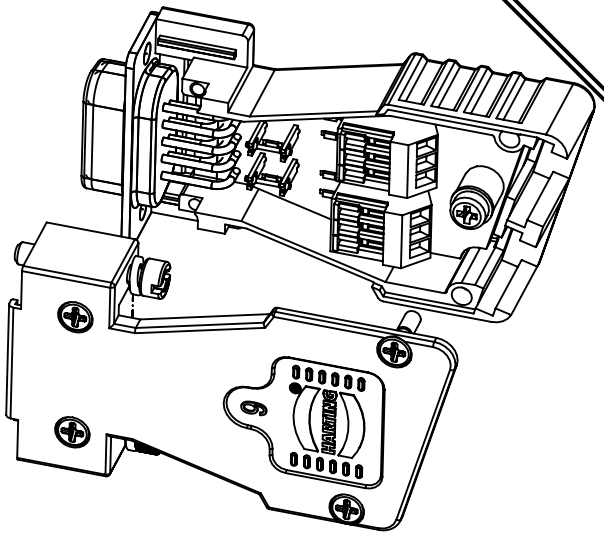

in set inclusive

Number	Description
1	blanking piece 9-37
1	PCBA

All Dimensions in mm
Original Size DIN A4

Scale 1:1

Free size tol.

Ref.

Sub.

All rights reserved

Department EL PD

HARTING
D-32339 Espelkamp

Created by ZHUANGJ | Inspected by LUOK | Standardisation ROEBEN | Date 2021-08-04 | State Final Release

Title InduCom 9 Profibus Interface

Doc-Key / ECM-Nr. 100073191/UGD/007/D 500000200533

Type TB | Number 66630096204 | Rev. D | Page 1/1

Part number	Performance level	Remark
66 63 009 6204 777	PL2	Small batch
66 63 009 6204	PL2	Standard batch

A4