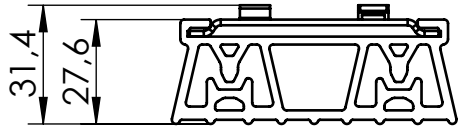

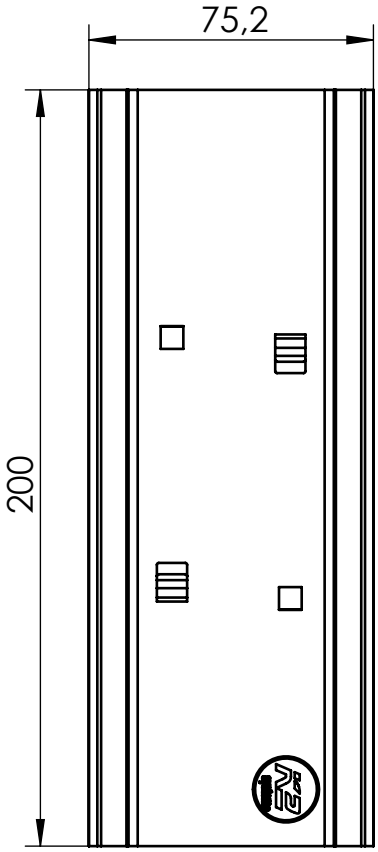

Isometric

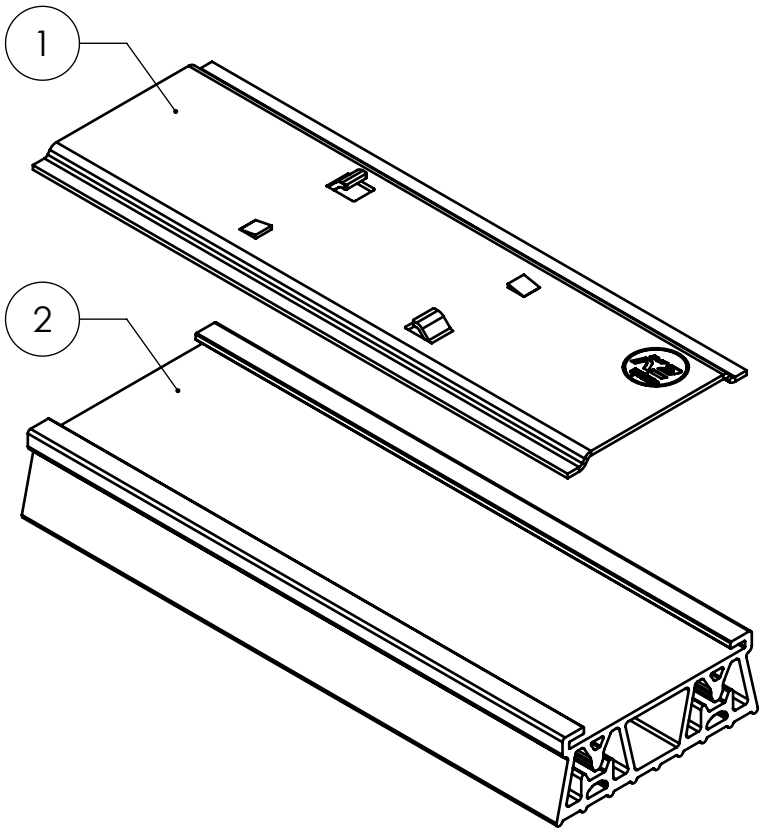

Pos.No.	Designation	Material	Quantity
1	LoadSolver sheet	EN AW 5754 H111	1
2	Mat S 200	EPDM 70 Shore A	1

K2 Systems GmbH
Haldenstr. 1
71272 Renningen
Germany
+49 7159 42059-0

Designation:

Data sheet LoadSolver
Subassembly

	Name	Date	Material:		Item no.:		
Designed	M. Schuler	04.12.2024	see table		2004782		A4
Approved	M. Schuler	08.04.2025	Surface: -		Drawing no.:	07-124-02	All dimensions in mm
Last change	S. Frey	08.04.2025	Weight: ca. 254.3 g/pc	Scale: 1:2			Sheet 1 of 1

This drawing is the sole property of K2 Systems GmbH. It is protected by copyright and may only be copied, reproduced or distributed to a third party with explicit permission!