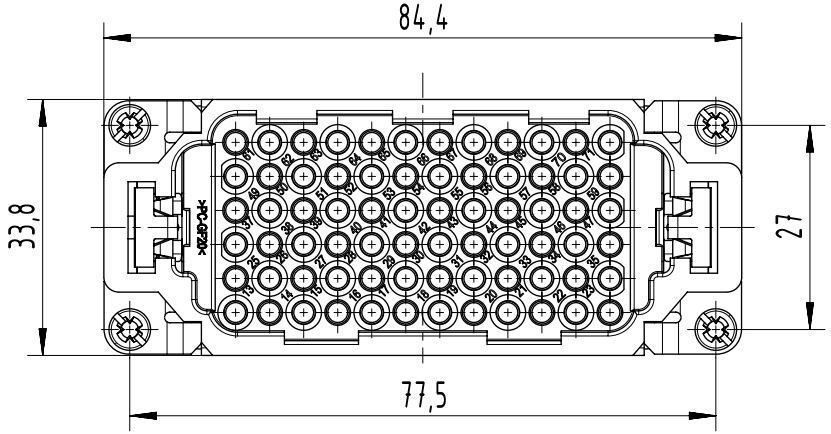


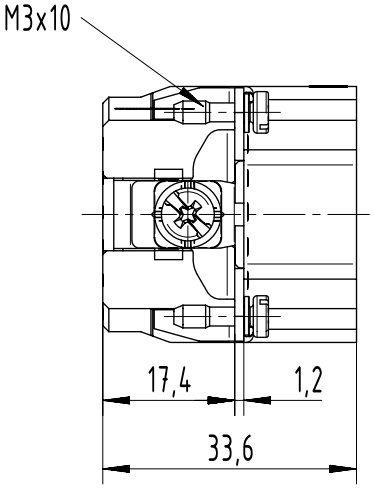


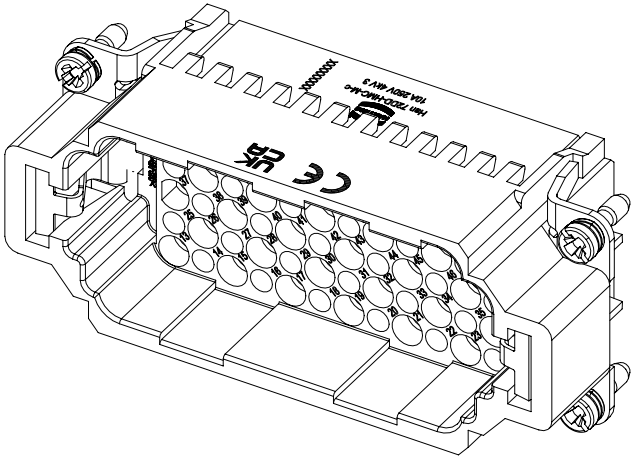

panel cut out

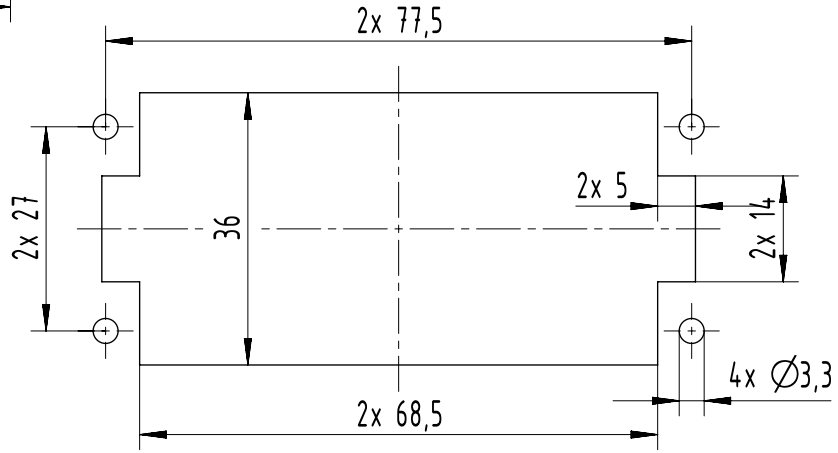


| | | | | | |
|---|---|---|---|---|---|
| All Dimensions in mm<br>Original Size DIN A4 | Scale<br>1:1 | Free size tol. | | Ref.<br>Sub. | |
| All rights reserved<br>Department EL PD | Created by<br>hellmann | Inspected by<br>sundermeier | Standardisation | Date<br>15-Aug-2024 | State<br>40 - Released |
| | Title<br>Han 72DD-HMC-M-c | | | | Doc-Key / ECM-Nr.<br>DS00193581 |
| HARTING<br>D-32339 Espelkamp | Type<br>TB | Design Number<br>DS00193581 | SAP Mat. Number<br>09162723001 | Rev.<br>C | Page<br>1/1 |

A4