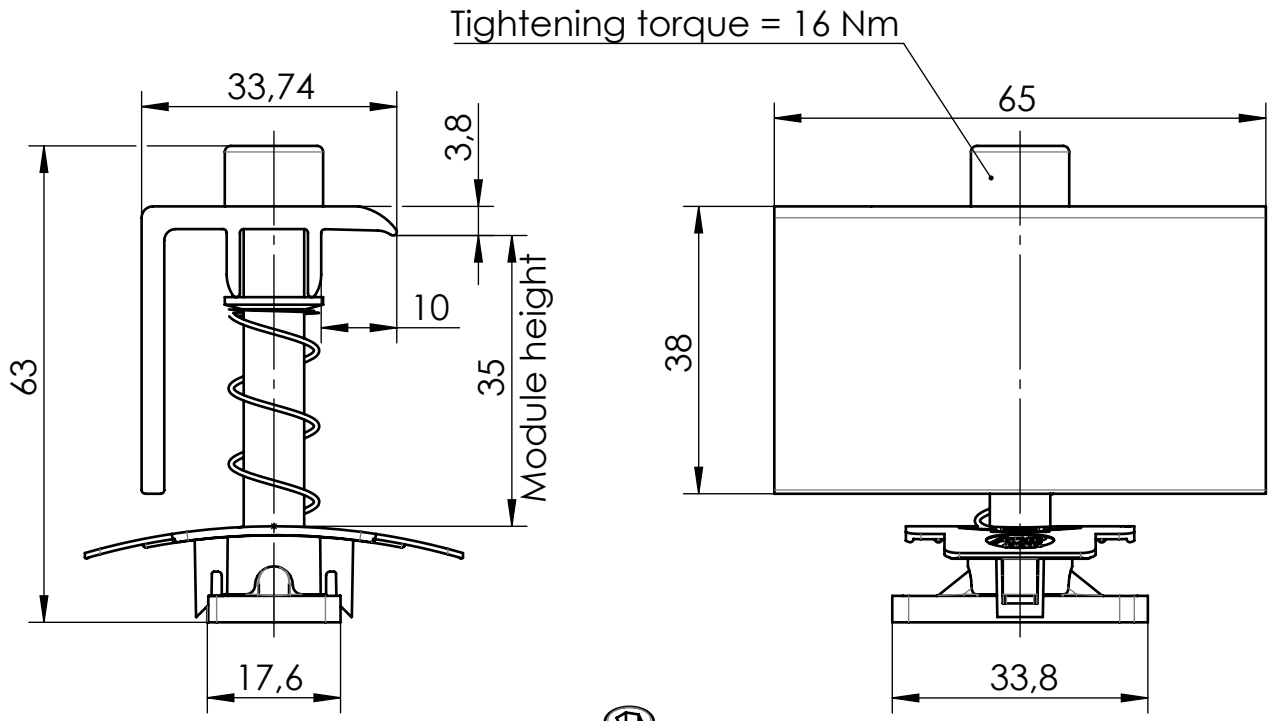

Isometric
1 : 2

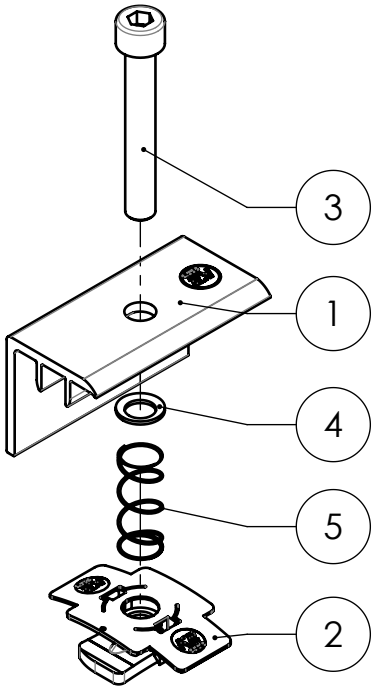

Pos.No.	Designation	Material	Quantity
1	XS Clamp EC 35 Solo	EN AW 6063 T66	1
2	MK2	TPC/ 1.4301	1
3	Socket head bolt serrated - sim. ISO 4762 - M8x55	A2-70	1
4	Locking washer M8	A2-70	1
5	MC/EC Spring 45-48 mm	1.4310 (X10CrNi18-8)	1

K2 Systems GmbH
Haldenstr. 1
71272 Renningen
Germany
+49 7159 42059-0

Designation:

Data sheet
XS Clamp EC Set 35

	Name	Date	Material:	Item no.:	A4
Designed	M.Schuler	11.11.2024	see table	2004612	
Approved	V. Schütz	11.11.2024	Surface: -	Drawing no.: 03-231-00	All dimensions in mm
Last change			Weight: ca. 88.3 g/pc Scale: 1:1		Sheet 1 of 1

This drawing is the sole property of K2 Systems GmbH. It is protected by copyright and may only be copied, reproduced or distributed to a third party with explicit permission!