lightnet

Lightnet GmbH
Zollstockgürtel 65
50969 Köln / Germany
Tel.: +49 (0) 221 22 25 26-0
E-Mail: info@lightnet.de
www.lightnet.de

MIDPOINT F7 | RECESSED

1. MONTAGE UND INSTALLATION | MOUNTING AND INSTALLATION:

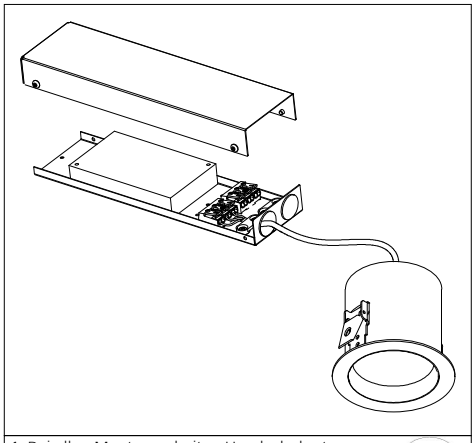

1. Bei allen Montagearbeiten Handschuhe tragen.
Use gloves when handling the fixture.

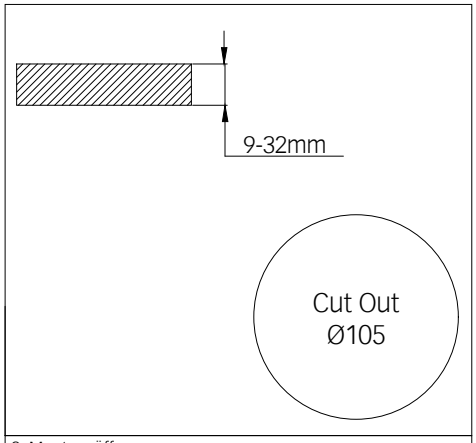

2. Montageöffnung.
Mounting cutout.

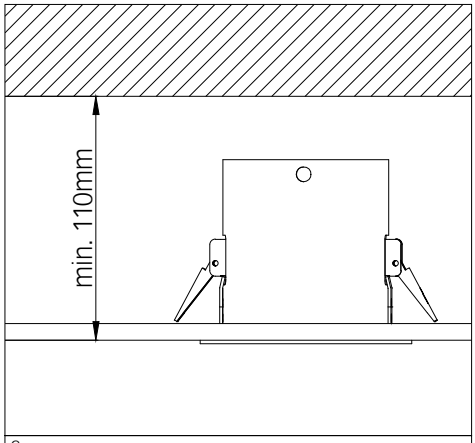

3.

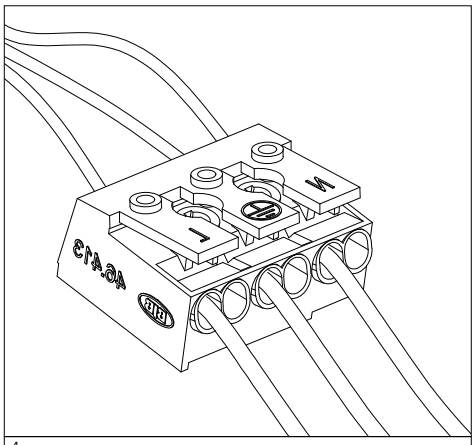

4.
- min/max stripped wire length: 7mm-10mm
- max power supply cable: 1,5mm^2

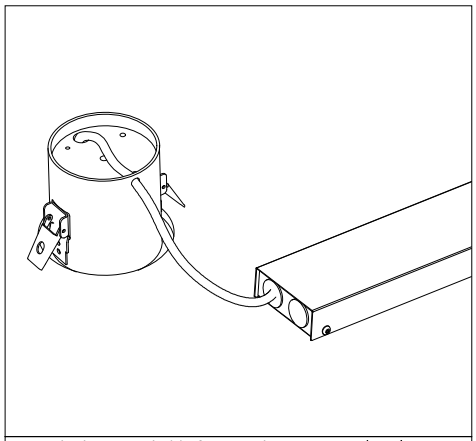

5. Luminaire not suitable for covering with thermally insulating material.