CORNING

Installation Instructions

Issue 3, December 2011

FRECAP MAX 48, 72, 120

These installation instructions are provided as guidance for the trained craftsperson carrying out the installation.

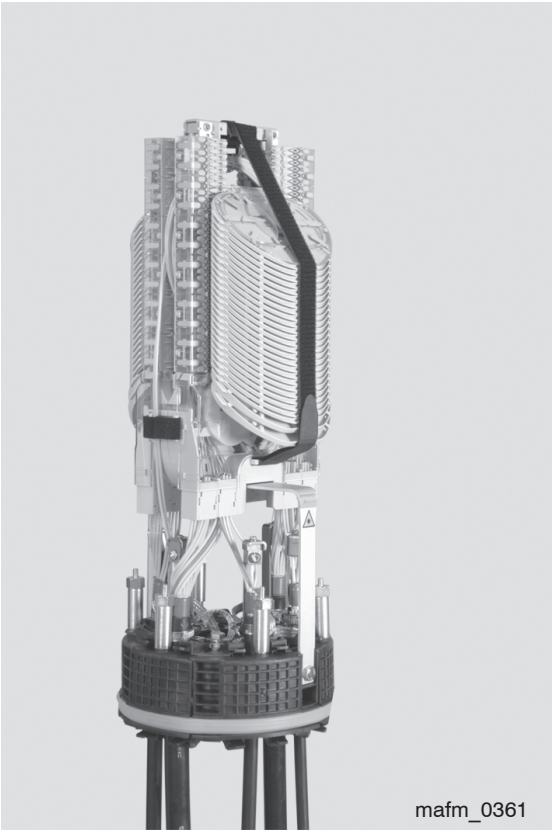

Caution: Note on storing closures in the ground.

After assembly, the closures must be stored in stone-free soil or sand. Then continue backfilling with stone-free soil until the closure is covered with a layer of about 10 cm. If necessary, before further backfilling of the installation hole, protect the closure and cables against mechanical damage with cover plates or similar.
See also the installation instructions of the relevant telecom companies.

Warning!

Laser/LED radiation in the non-visible spectrum possible!

If the degree of hazard of the laser/LED radiation is not known, on no account look into open fiber ends.

Caution

The assigned degree of hazard is for the constructor/operator of the communication equipment to finally determine and to indicate in a responsible manner (e.g. by affixing standards-compliant warning labels as per DIN EN /IEC 60825-1, applicable issue, by compliance with BGV B2 “Laserstrahlung“, applicable issue).
If the techical data should change in a way that affects the degree of hazard, the warnings must if necessary be amended accordingly and work safety precautions must be taken, see also e.g. DIN EN/IEC 60825-2, applicable issue.

Contents

1. Contents of the Closure Kit

1. Canister
2. End Cap with mounted fiber management
3. Clamping ring
4. Sealing ring
5. Sealing segment
6. Cable strain relief
7. Plugs
8. Cable clamps
9. Adapters for cables Ø 13 mm and smaller
10. Screw securing the ground lead
11. Cleaning cloth
12. Lubricant
13. Brush
14. Cover for distribution element with 1x fiber tool
15. Cover for fiber guide
16. Cover for splice trays
17. Felt fastening strips
18. Warning notice Laser/LED radiation
19. Installation instructions

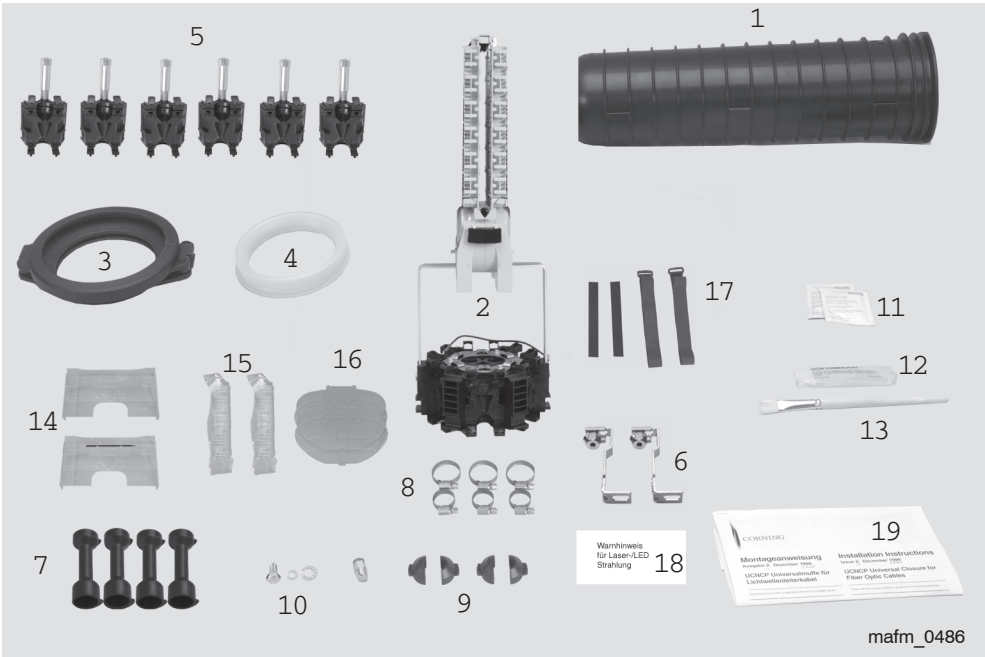

2. Accessories (ordered separately)

2.1 Single-Fiber Management

SC splice tray
up to 6 heatshrink splices

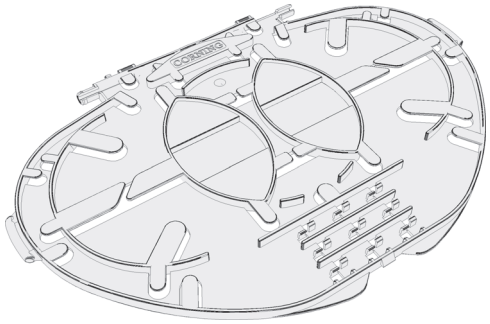

mafm_0691

2.2 Multi-Fiber Management

SE splice tray
up to 12 heatshrink splices

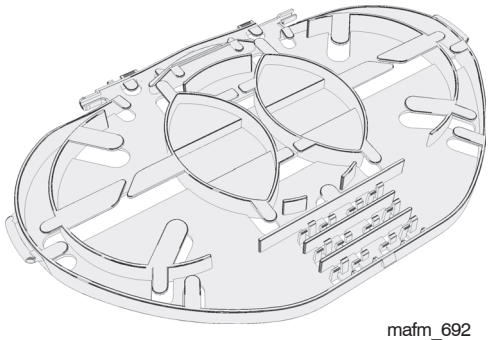

mafm_692

2.3 Accessories for an Additional Cable

1. Cable ground lead kit
2. Cable branching kit

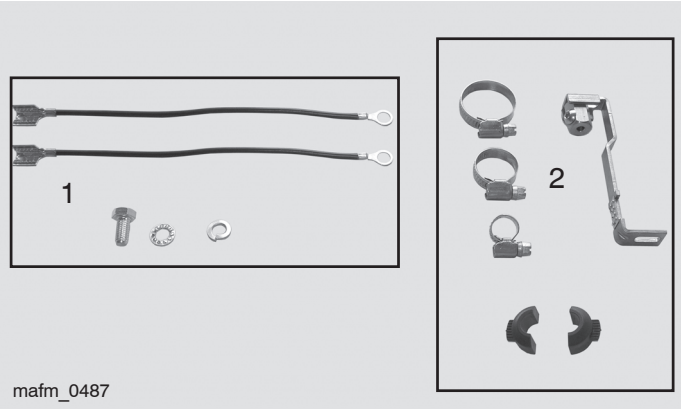

mafm_0487

2.4 Mounting Kit with Trays

1. Tray retainer, left
2. Tray retainer, right
3. Fiber guides
4. Splice trays

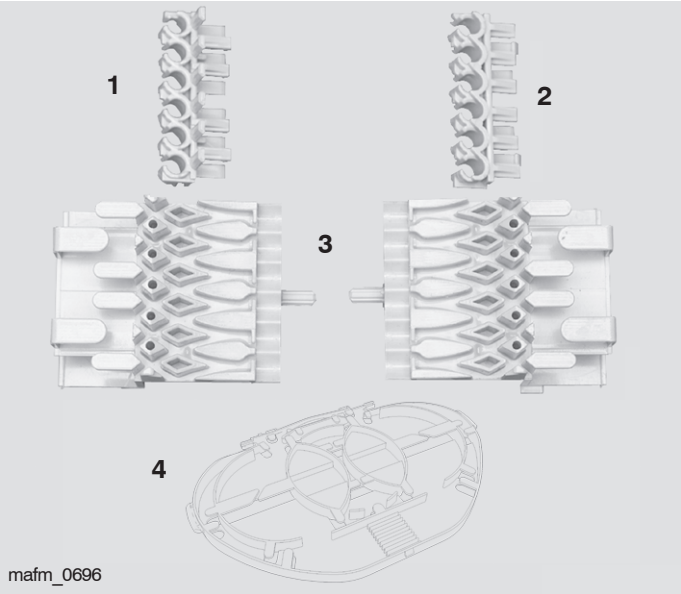

mafm_0696

2.4 Installation Accessories

1. Bench mounting
2. Wall and pole mounting

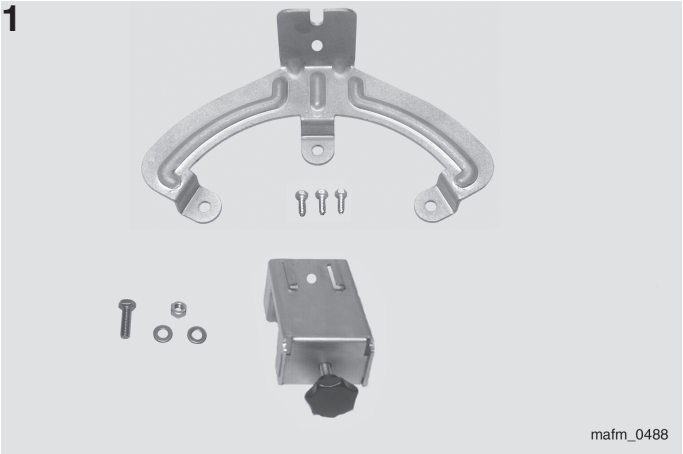

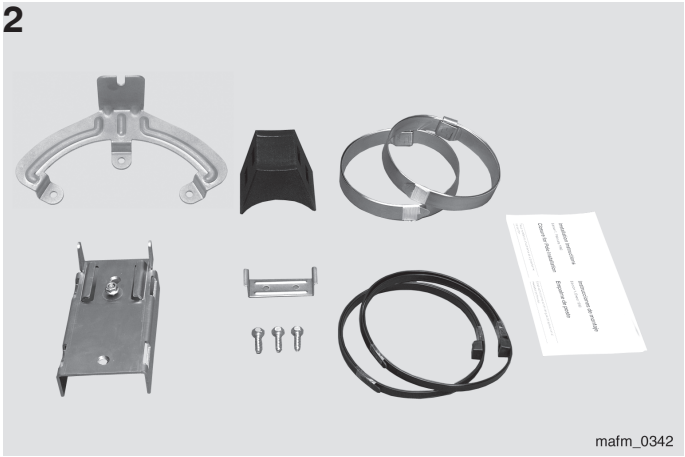

3. Technical Data

Table 1

Type	Dims. in mm		Min. buffer tube length with1200 mm fiber length in the tray		
	La	Da	Cut cables (A)	Uncut cables (B)	Min. buffer tube length (C)
FRECAP MAX 48	525	306	1800	3600	to be determined at distribution element
FRECAP MAX 72	600	306	1900	3800	
FRECAP MAX 120	730	306	2050	4100	

Sketch1

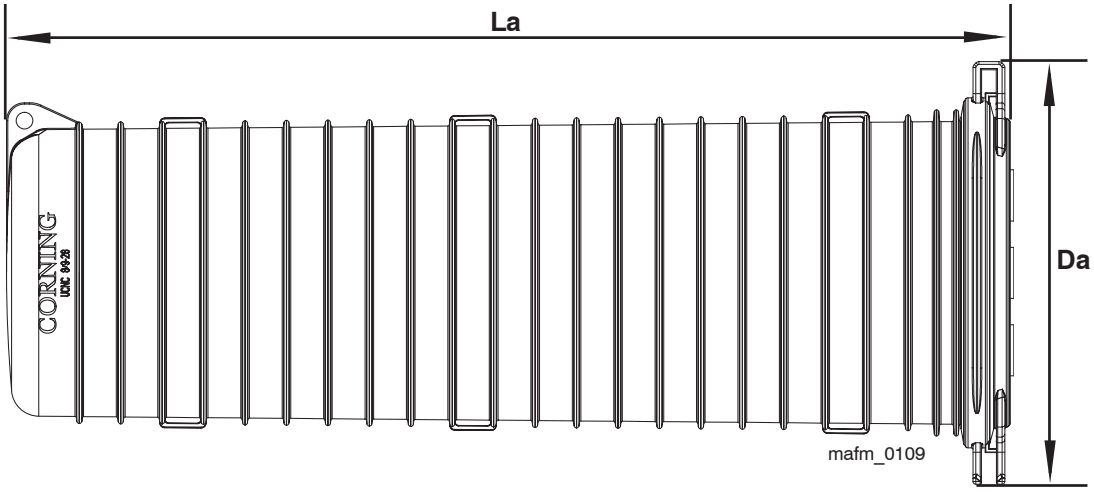

Cut cable

Sketch 2

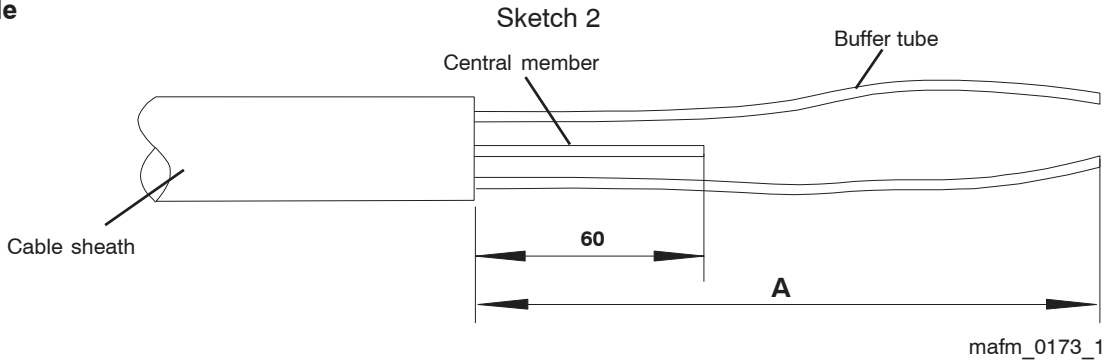

Sketch 3

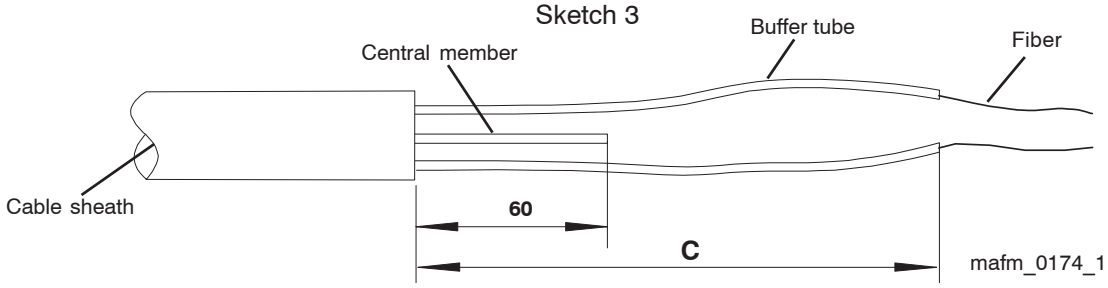

Uncut cable

Sketch 4

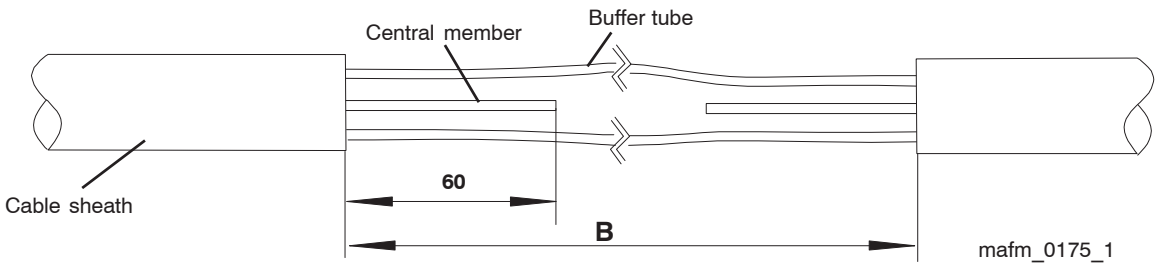

Cable for mounting a ground lead with cable sheath clip

Sketch 5

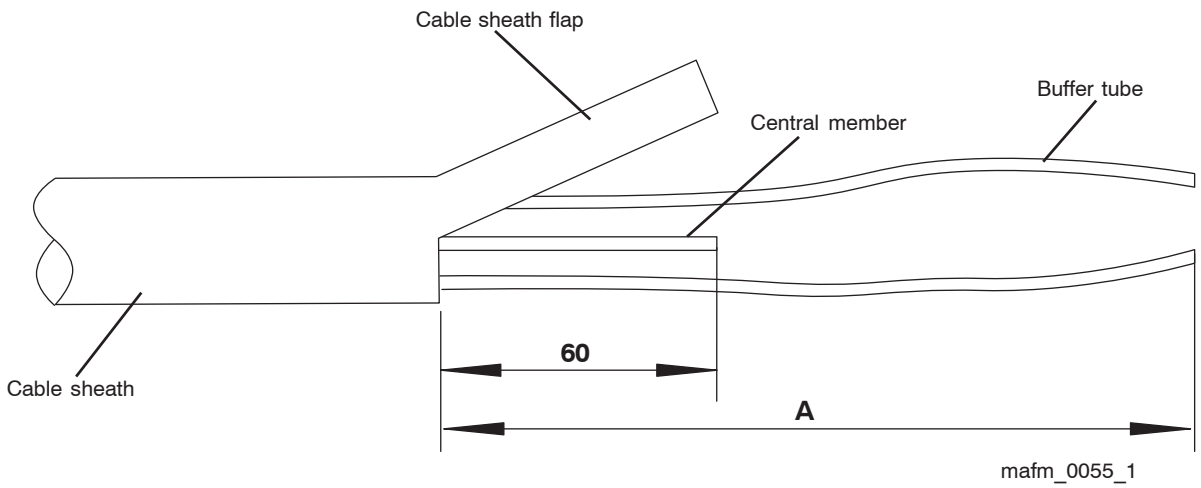

Note: If necessary strip the PE jacket from the thickened central members over a length of about 20 mm. Remove the cable sheath on one side as shown in the drawing.

Table 2

Type	Maximum Quantity					
	Splice trays SC	Splice trays SE	Fusion splices on SC trays		Fusion splices on SE trays	Quantity and Ø of the cables
			2 splices	6 splices		
FRECAP MAX 48	48	24	96	288	288	6 x 6- 25 mm
FRECAP MAX 72	72	36	144	432	432	6 x 6- 25 mm
FRECAP MAX 120	120	60	240	720	720	6 x 6- 25 mm

Sketch 6

3.1 Cable Entry Area

End cap outside

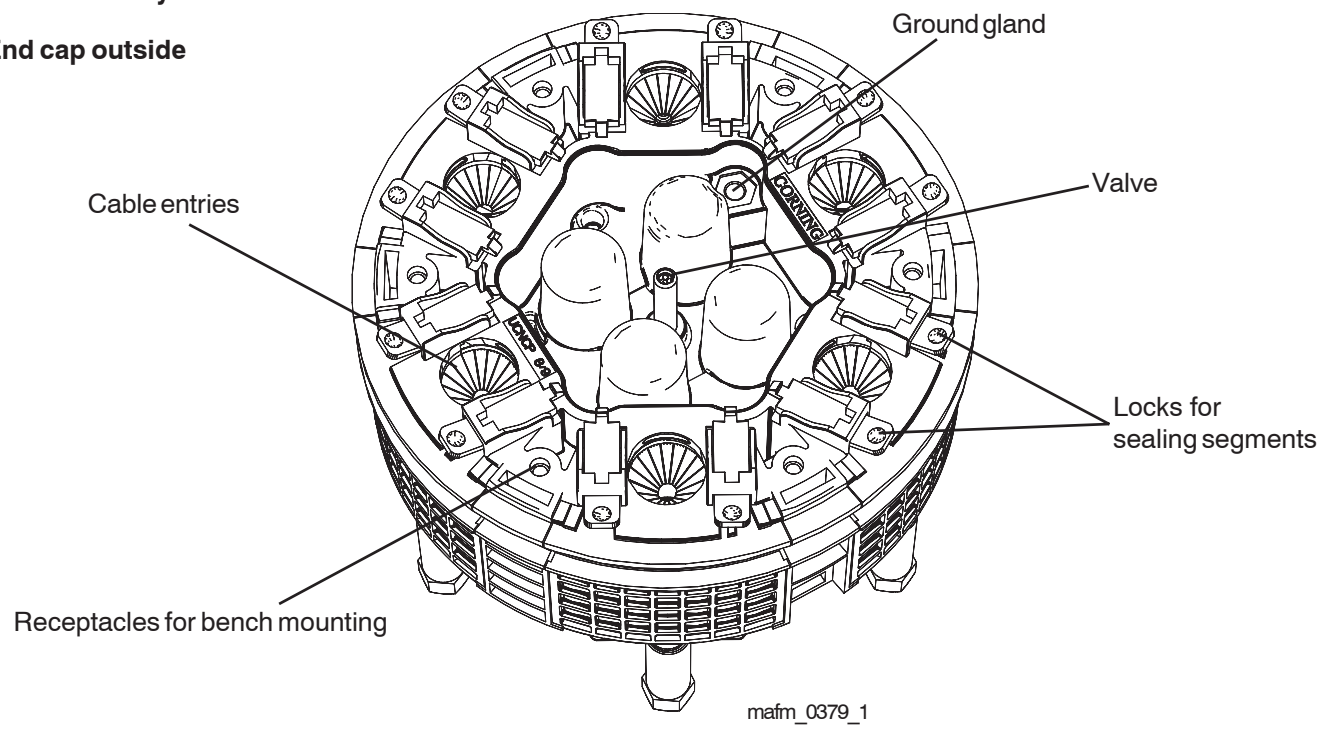

End cap inside

Sketch 7

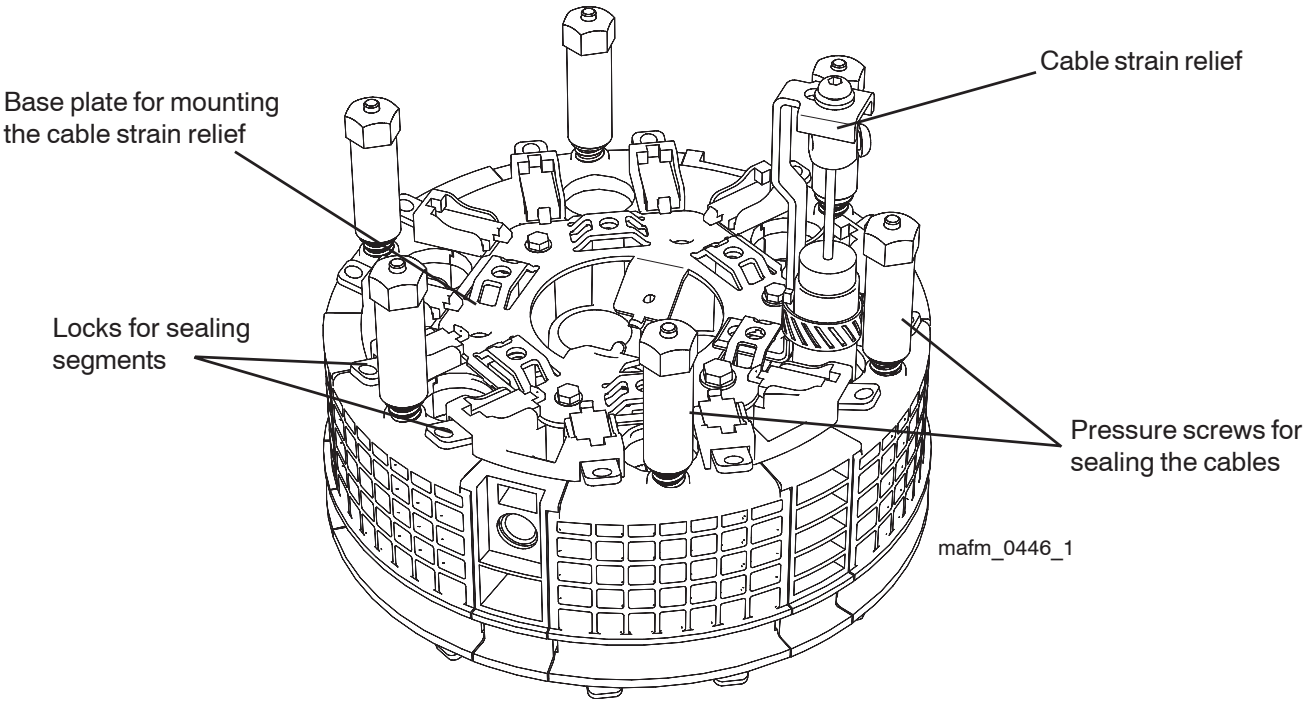

3.2 Numbering of the Cable Entries

The gel end cap UCN P 9 provides facilities for inserting 6 cables. The cable entries 1 and 2 are designed for (uncut) main cables with a maximum outside diameter of 25 mm. The other cable entries permit only the installation of cut cables with a maximum outside diameter of 25 mm. Numerous cable configurations are possible. The following instructions are therefore limited to describing only one typical application.

End cap outside

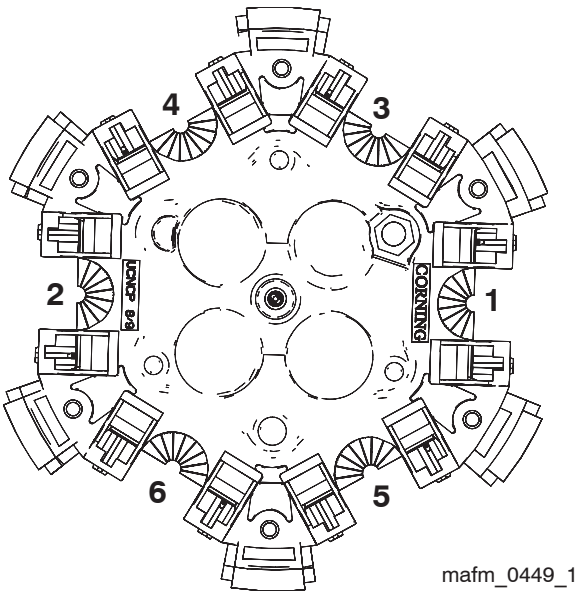

End cap inside

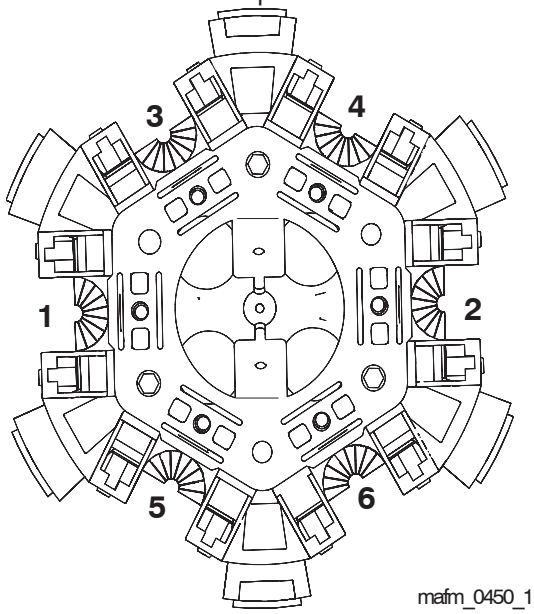

4. Preparing the Cables

4.1 Uncut Cables

Strip the cable sheath to a length of dimension B (see Table 1).
Clean the cable in the area to be sealed. To remove scoring, scrape the cable surface with the back of a knife (do not use emery cloth).

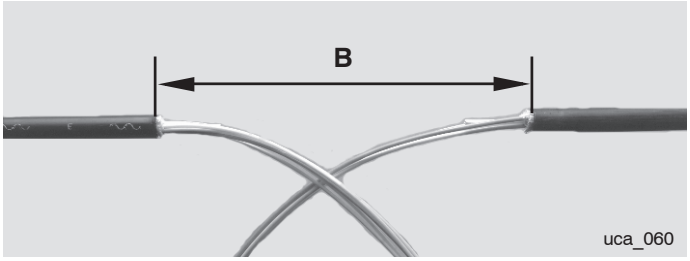

4.2 Cables with SZ Stranding: Mark the cable in the middle of the bend and remove the cable sheath on the right and left of it to a length of 1100 mm.

Find the buffer tube reversal point in the cable and mark the cable at a distance of 1800,1900 mm or 2050 mm (see Table1).
Remove the remaining cable sheath up to the markings.

Important: Ensure that the orientation of the individual buffer tubes at the stripped edges is identical!

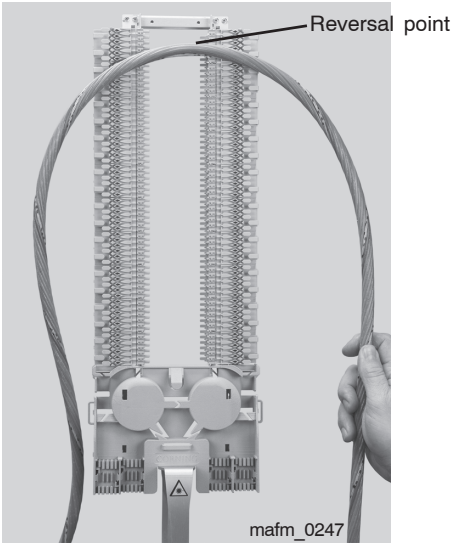

4.3 Caution: Before mounting the end cap, slide the sealing ring in the correct orientation over the cables.

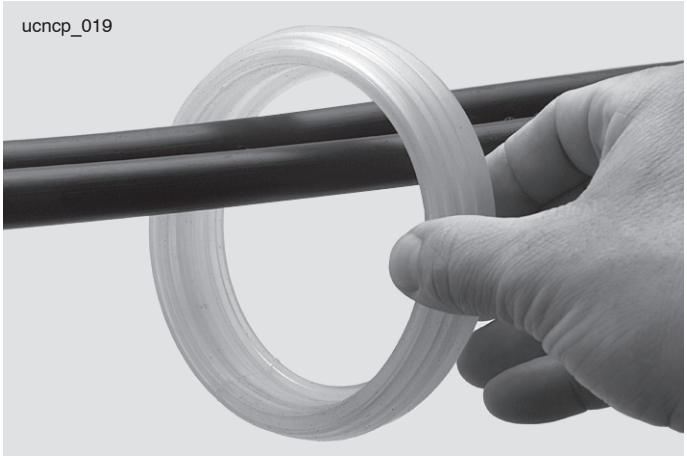

The **lip of the sealing ring** must point towards the buffer tubes. This is necessary in order to ensure correct assembly as from **Sect. 7.6**.

Sketch 8

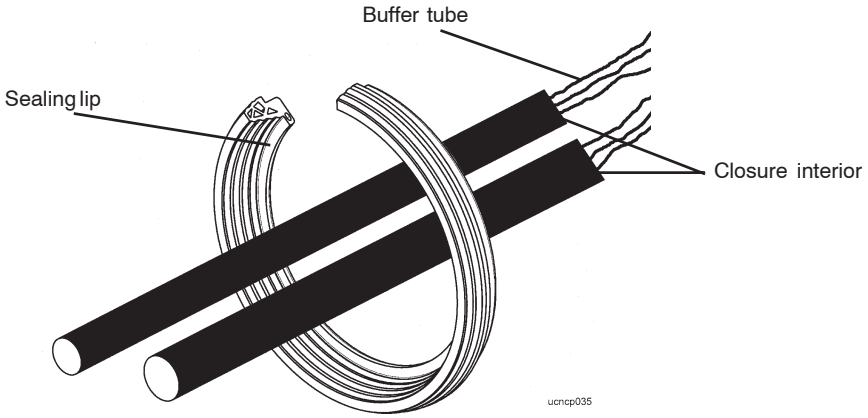

4.4 Caution: In special applications requiring a ground lead, prepare the cable as shown in the drawing. Make 35 mm cuts in the cable sheath on opposite sides. Remove one side of the cable sheath and shorten the central member to a length of 60 mm.

Sketch 9

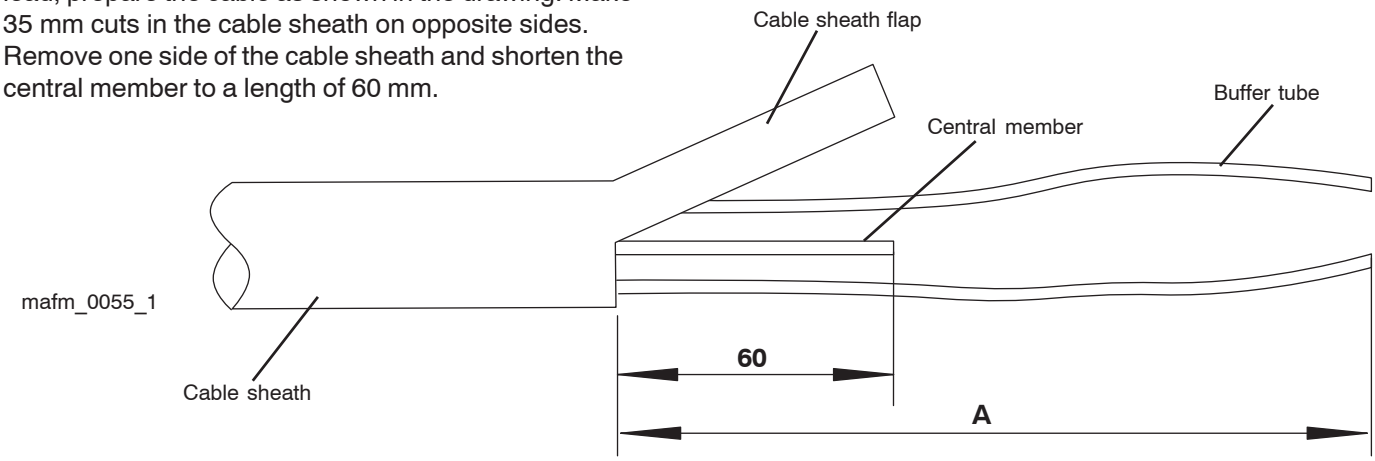

4.5 Slide cable sheath clip over the cable sheath.

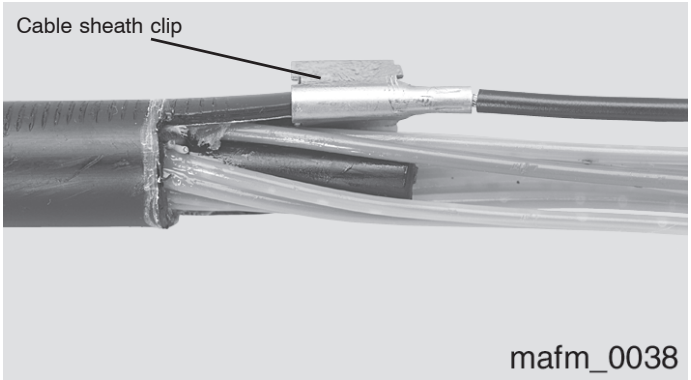

4.6 Crimp the cable sheath clip onto the cable sheath with flat-nose pliers.

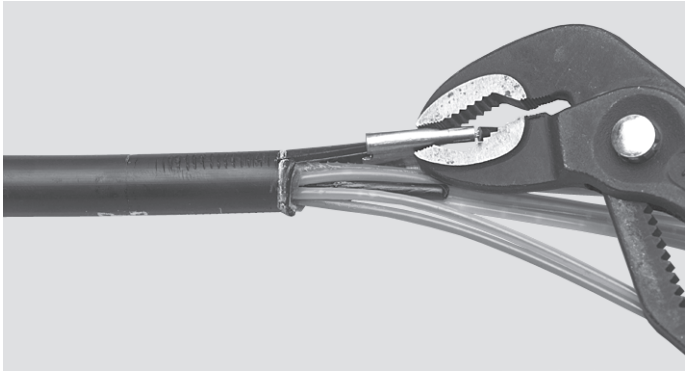

4.7 Secure the cable to the cable strain relief as shown in the drawing.
Note: The guide bush can be centered to the central member. Undo the centering screw, move the guide bush to the correct position and retighten the centering screw.

Sketch 10

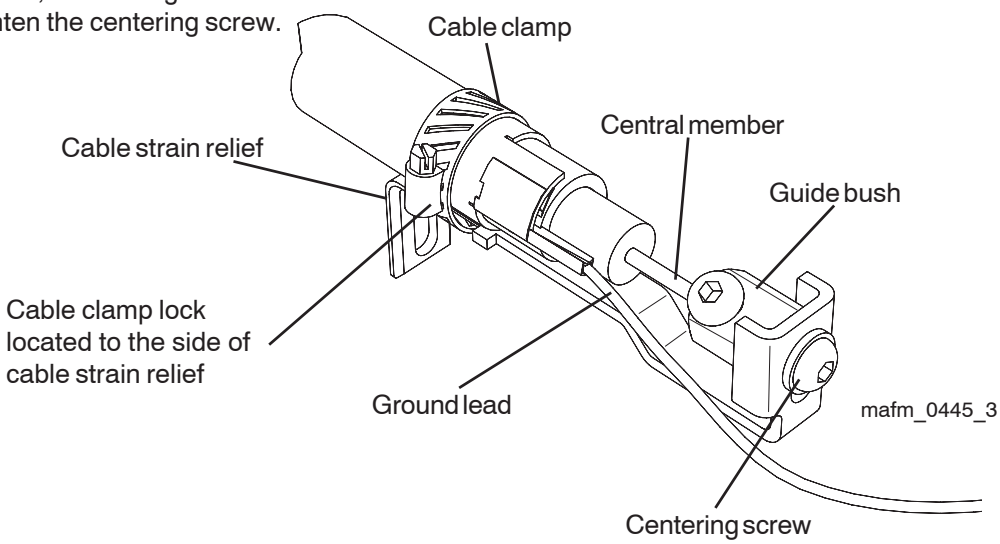

4.8 If no ground lead is secured to the cable, secure the cable and central member to the strain relief as shown in the drawing. In both applications (Sect. 4.7, 4.8) ensure that the shoulder of the strain relief aligns with the stripped edge of the cable. Position the lock of the cable clamp to one side (see also drawing 11).

Sketch 11

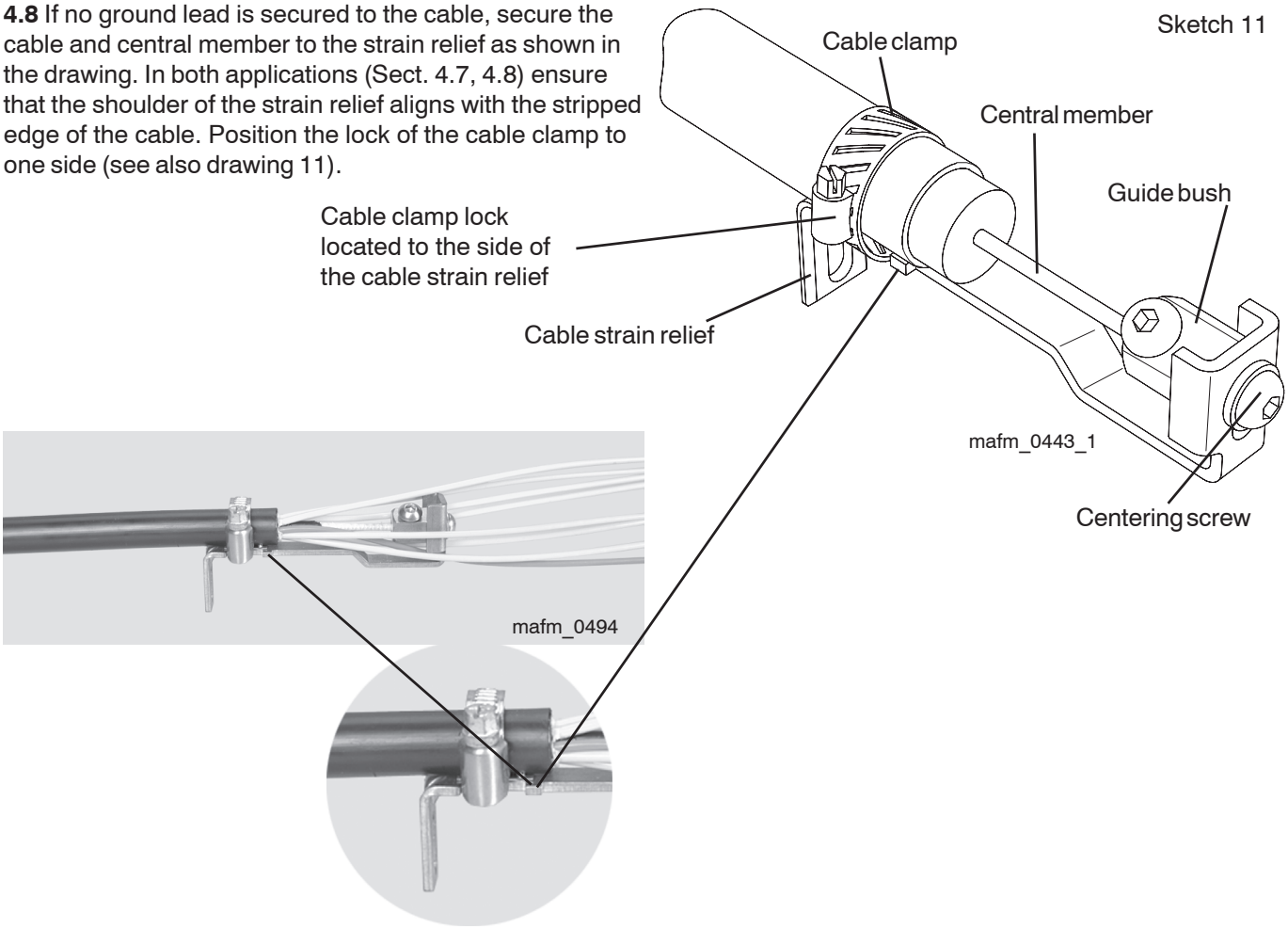

5. Assembling the End Cap

5.1 For wall, pole or manhole mounting, secure the closure holder (accessories, ordered separately) to the bottom of the end cap with 3 screws so that the ports 1 and 2 are accessible for the uncut main cable.

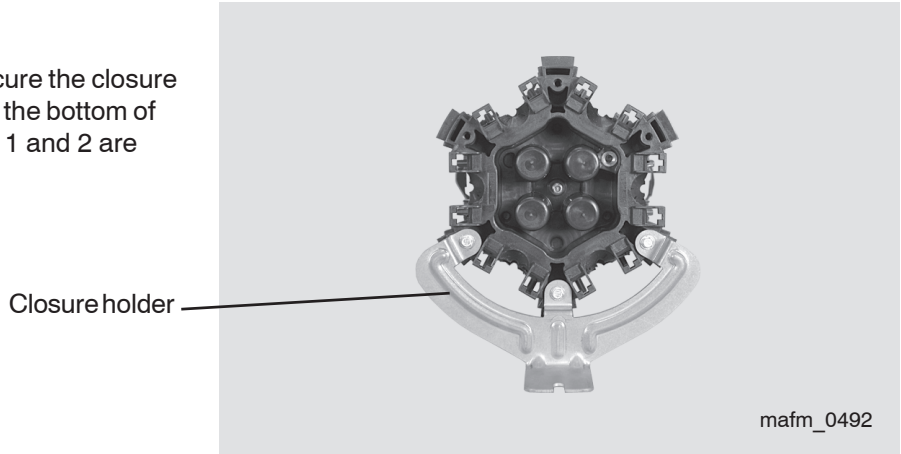

5.2 Secure the mounting clamp (accessories ordered separately) to the assembly bench or other suitable place. Secure the end cap in the holder.

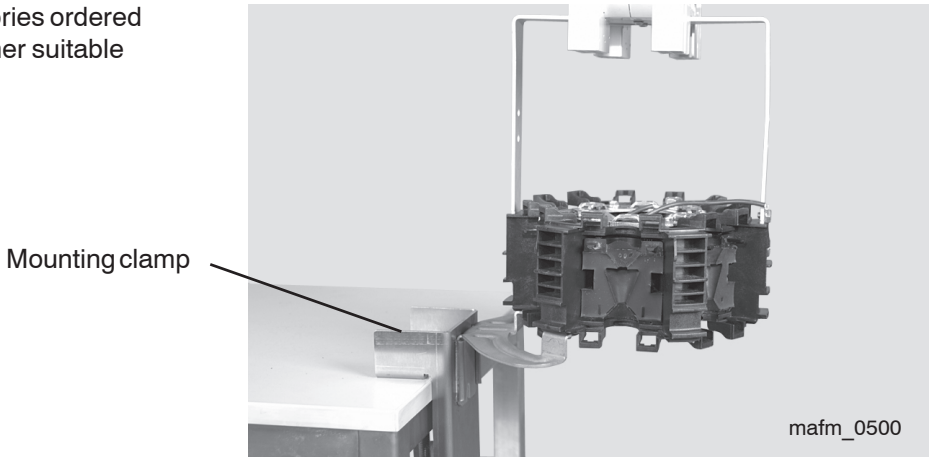

5.4 Insert the cables with the central member strain relief in the receptacle of the base plate as shown. The play between strain relief and base plate does not affect the functional capability of the closure.
If necessary, secure the ground lead from the cable and mounting frame to the base plate.

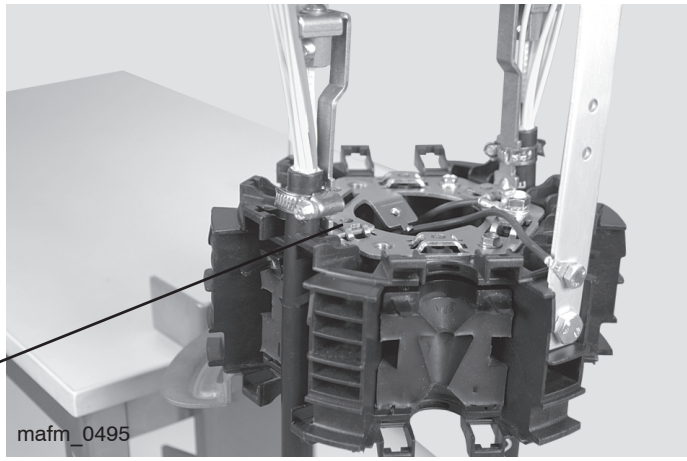

Sketch 12

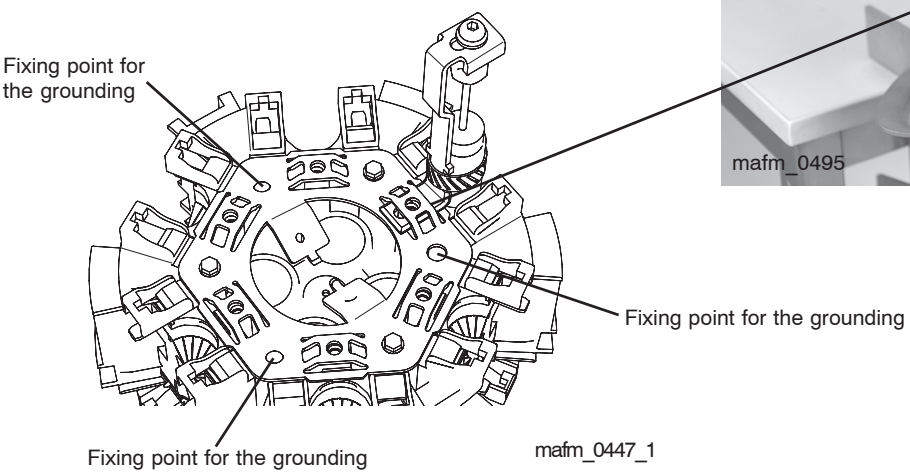

Note: Screw no more than 2 cable ground leads to one grounding point!

Caution: Align cables / buffer tubes to bring buffer tubes with the same numbers opposite each other.

Sketch 13

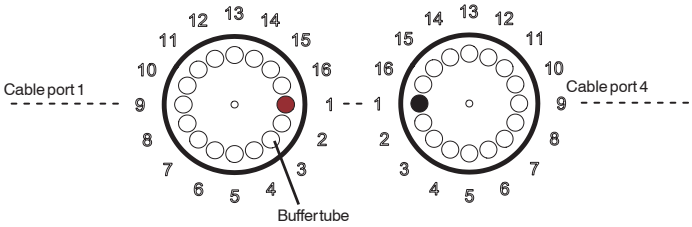

5.5 To ease insertion, slightly squeeze the 4 locking hooks (top and bottom) together.
Place the sealing segments on the cables and push them on with both hands...

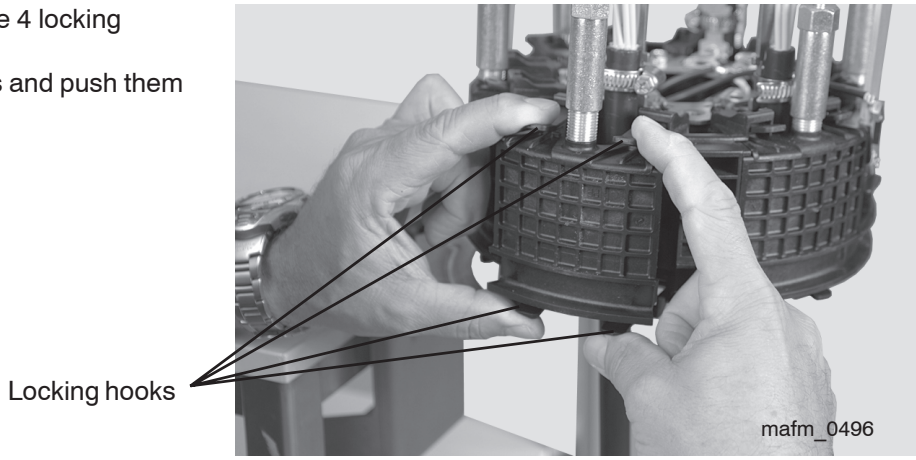

...until the locking hooks at top and bottom latch in the end cap. When the sealing segment is correctly latched, the sides are flush with the end cap (see sketch15).

Sketch 14

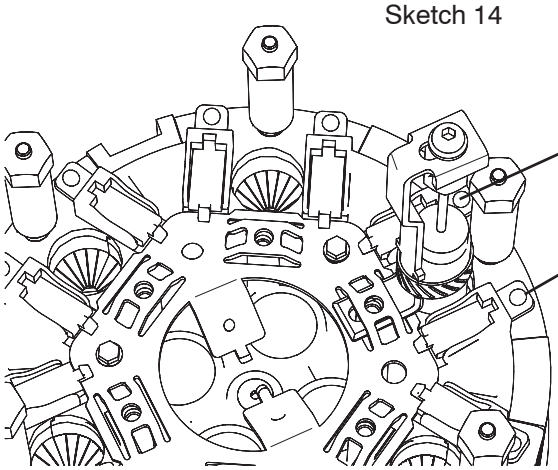

mafm_0442_1

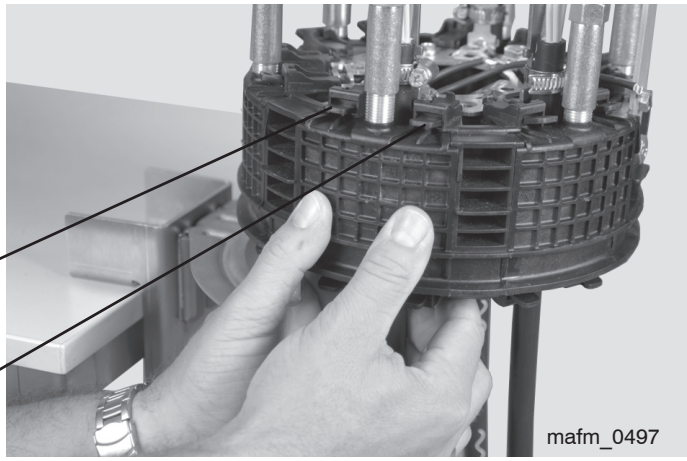

mafm_0497

5.6 Tighten the pressure screw on the sealing segment with an open-end wrench (size 13) until the marking becomes visible.

Sketch 15

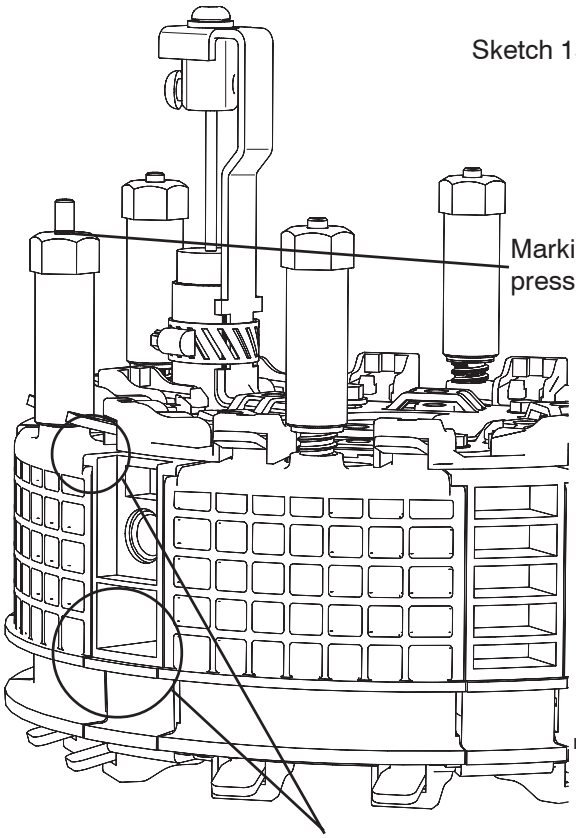

mafm_0448_1

Caution: Sealing segment must be flush with the end cap.

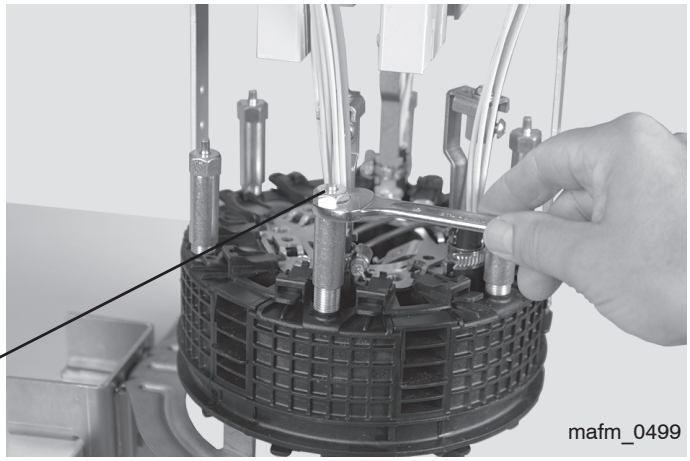

mafm_0499

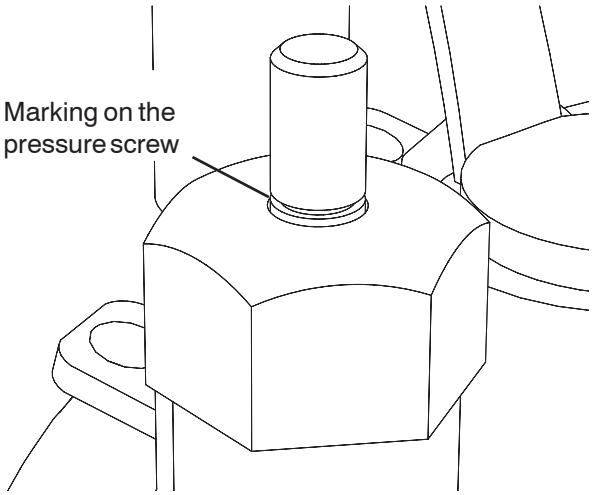

mafm_0437

5.7 Any cable port not used must have a plug inserted. Insert the plug with its tabs entering the recesses in the end cap.
Then insert the sealing segment as described in Sect. 5.5.

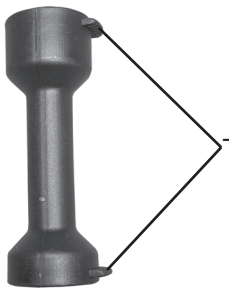

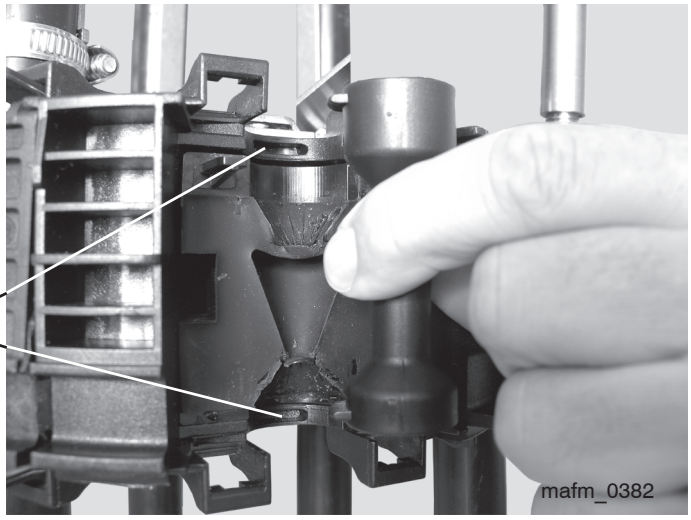

5.8 If a cable is used with a Ø of 13 mm or less, first insert an adapter.
One half fits in the bottom part of the seal on the end cap, the second part in the bottom part of the sealing segment.
The tabs must be inserted in the relevant recesses.

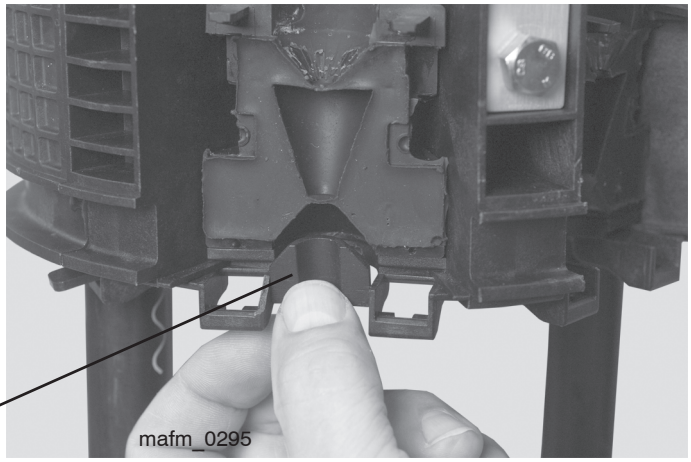

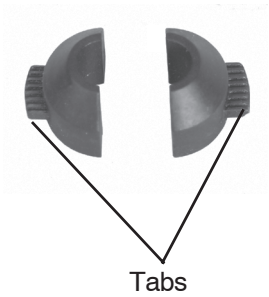

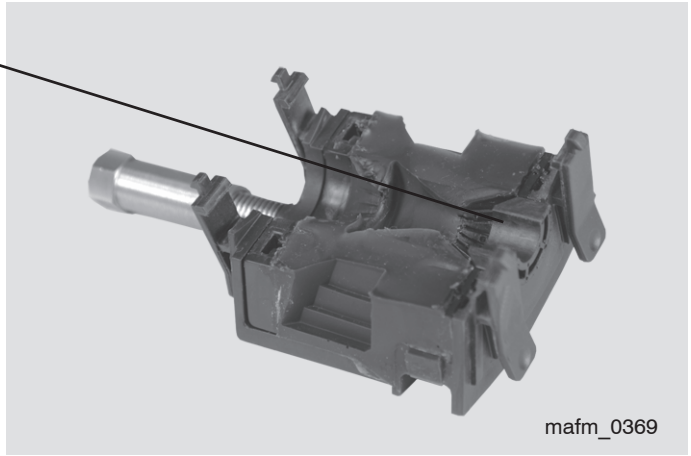

5.9 Insert the sealing segment as described under Sect. 5.5.

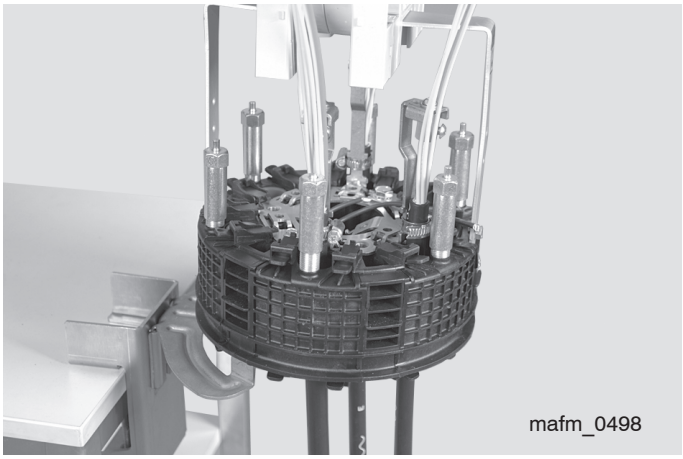

6. Buffer Tube / Fiber Management

6.1 Description of the Tray

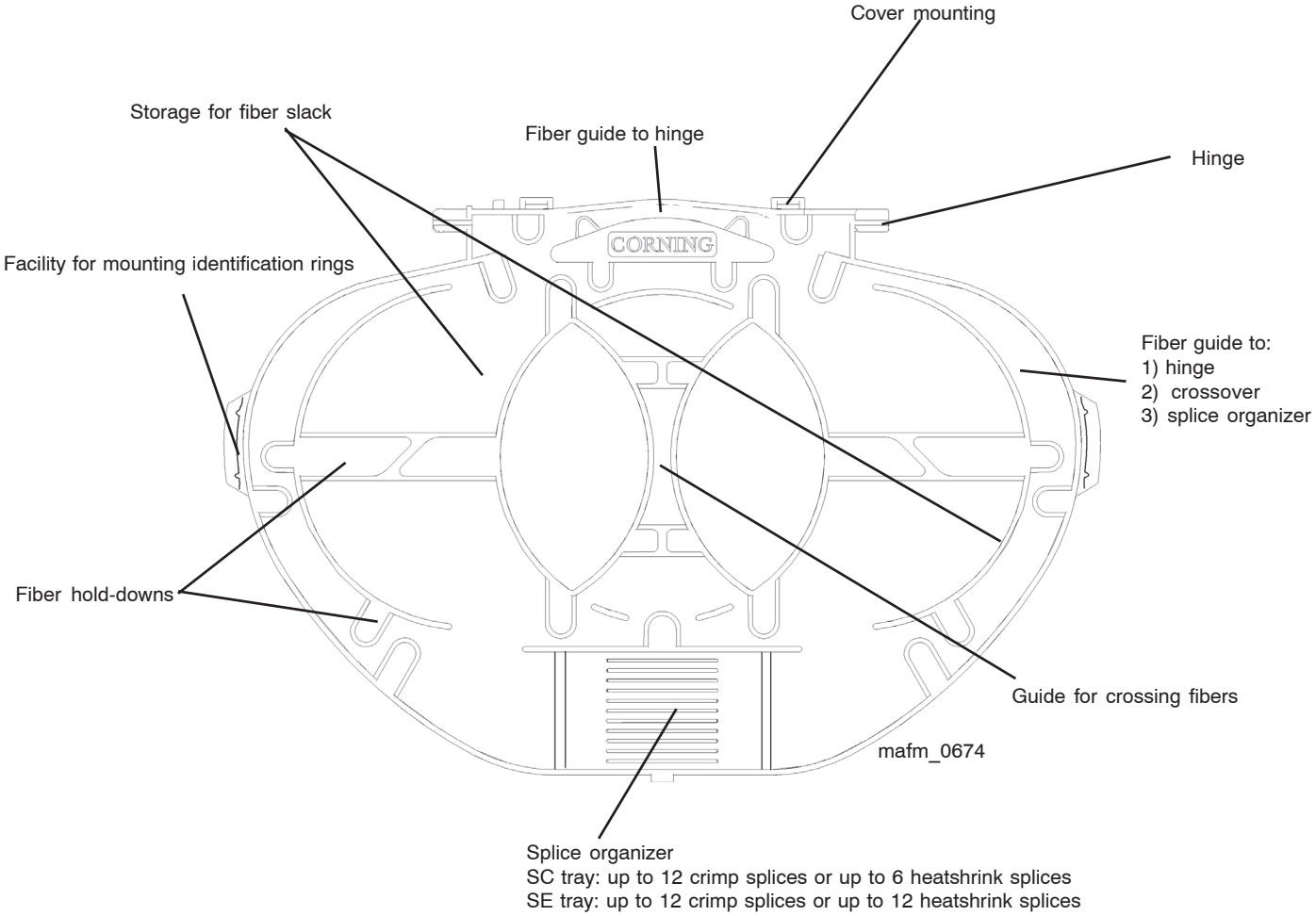

6.2 Undo the felt strips on the tray stack. Remove the screws on the slack storage.

6.3 To insert the unwanted, uncut buffer tubes, open the frame.

6.4 Distribute the wanted buffer tubes of the uncut cable to the left- and right-hand sides.
Place the unwanted buffer tubes in the slack storage and reclose the frame.
Secure the buffer tubes to the distribution element with felt strip.
Note: If only one tray stack is required, a slack store (ordered separately) can be mounted at the rear.

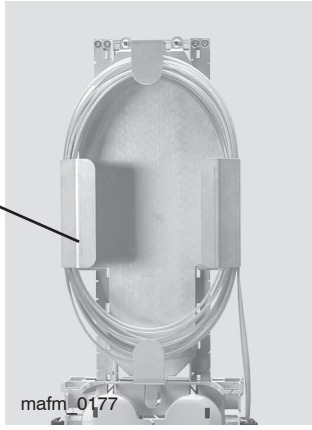

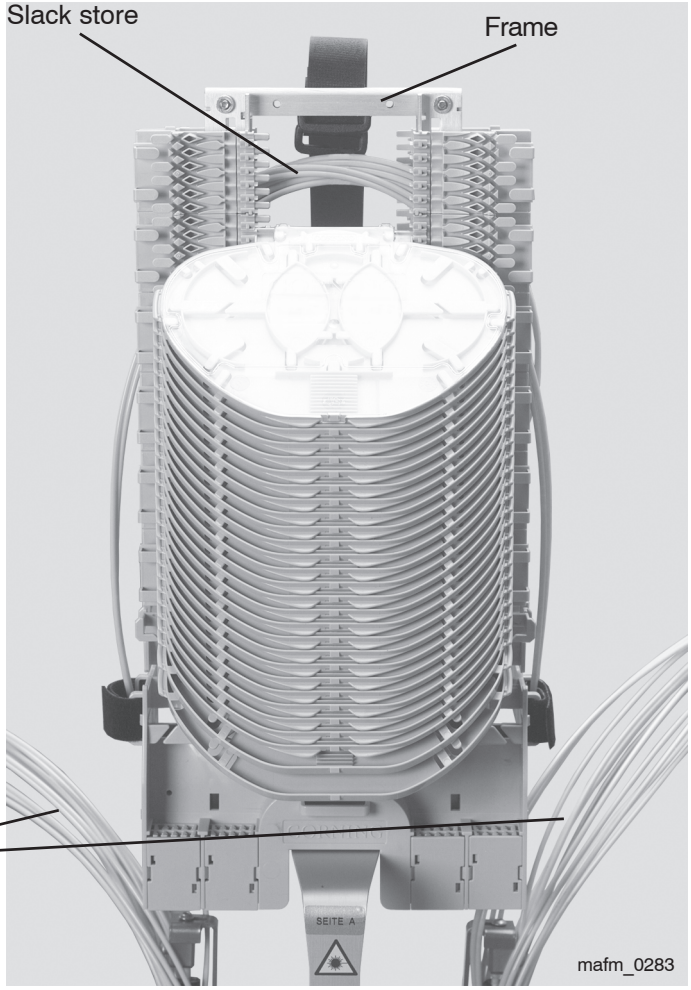

6.5 Prepare cables as shown in the drawing.
Dimension **C** must be determined at the distribution element.

Sketch 17

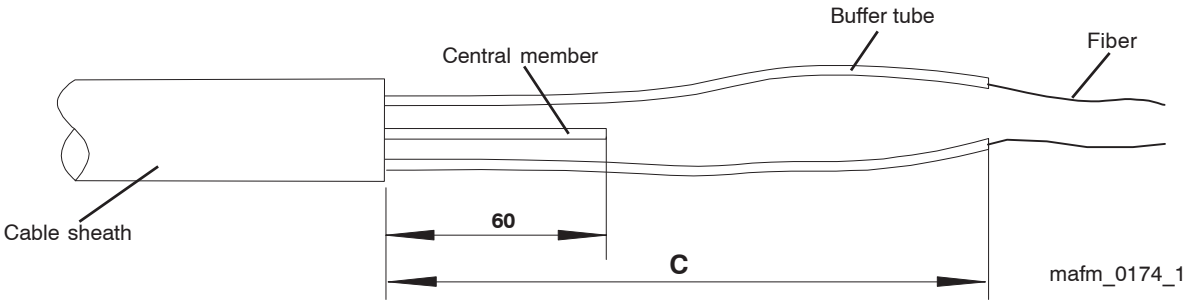

6.6 Caution: The main cable buffer tubes should be placed next to each other working outwards, starting in the outer retaining clip in bays **1**.

The branch cable buffer tubes should be placed next to each other working outwards, starting in the inner retaining clip in bays **2**.

Sketch 18

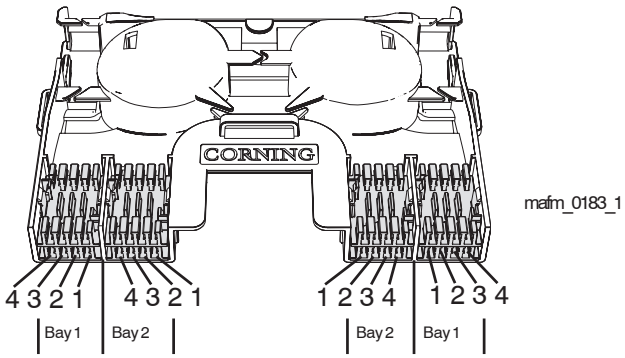

6.7 If the retaining clips for the buffer tubes are still in the distribution element (depending on as-supplied condition), they can be removed as shown in sketch 19.

Sketch 19

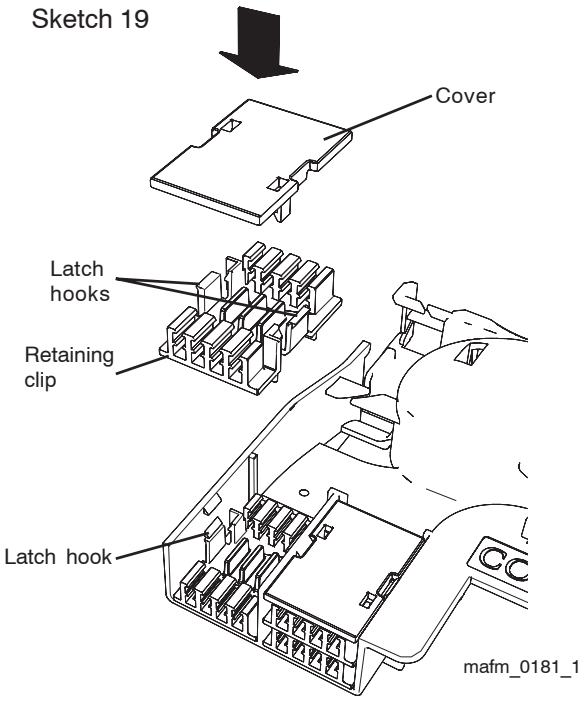

To remove the retaining clips, the latch hooks can be pressed inwards slightly with the fiber tool or a narrow screwdriver.

6.8 Withdraw the fiber tool from the cover for the distribution elements...

...insert the fiber tool in the opening on the cover and open it with gentle pressure.
At the retaining clips, slide it behind the latch hook and press open.

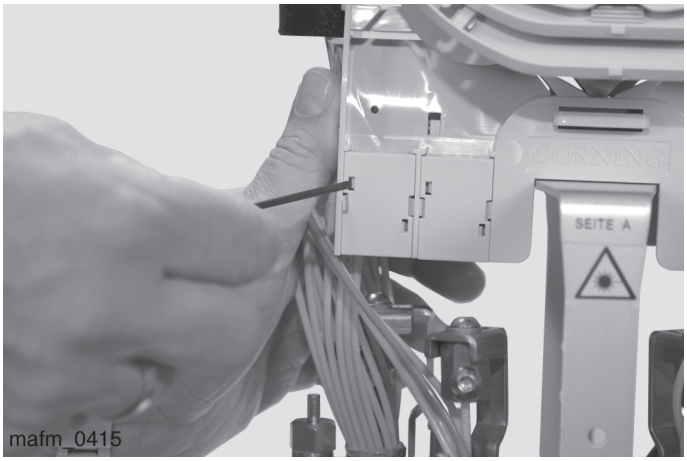

6.9 Important: When mounting the buffer tubes, start at the lower retaining clips.

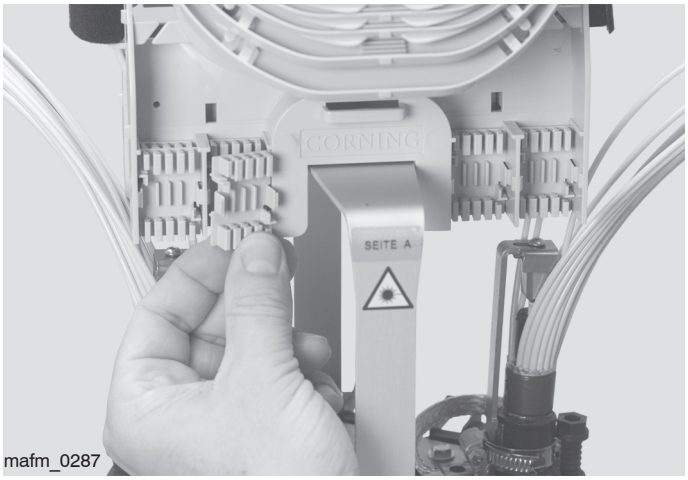

mafm_0287

6.10 Insert the wanted buffer tubes in the bay and mark the stripping length with a pen. Select the stripping lengths so that the end of the buffer tube is located **about 5 mm** above the retaining clip for the buffer tubes. See also drawing 20.

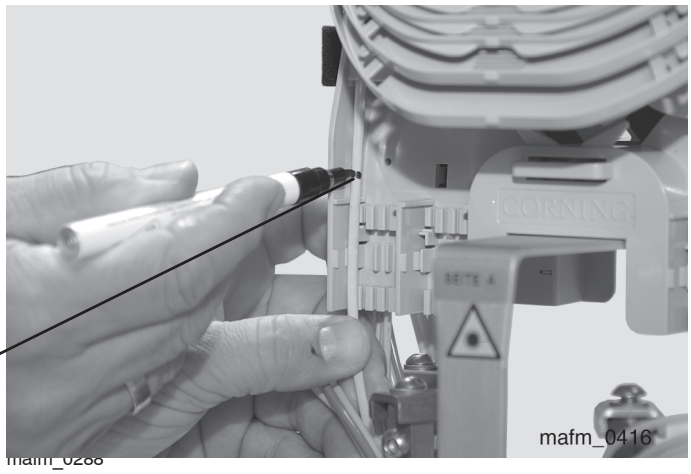

mafm_0416

Strip buffer tubes only with suitable tool and clean fibers.

Sketch 20

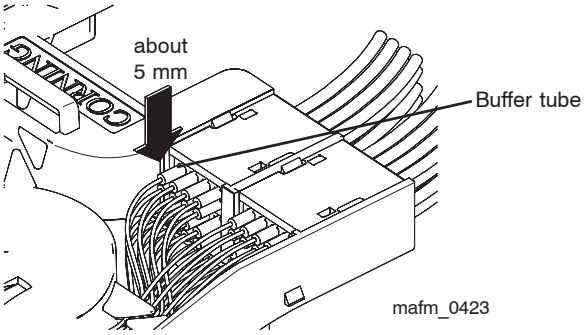

mafm_0423

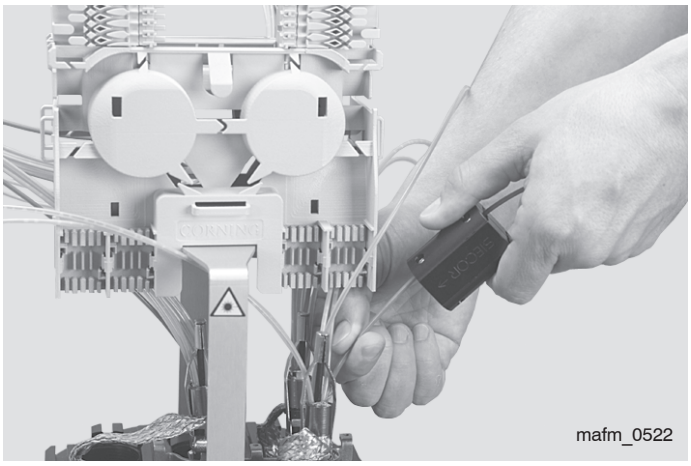

mafm_0522

6.11 The stripped buffer tubes can be more readily pressed into the retaining clip by again using the fiber tool.

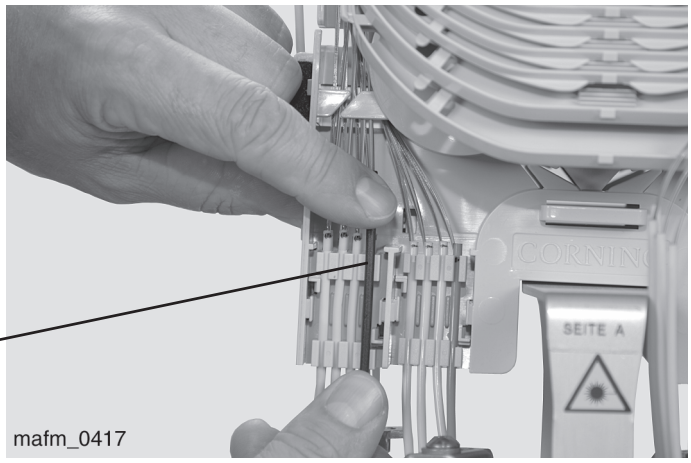

mafm_0417

6.12 Insert the stripped buffer tubes in the retaining clip.
Caution: Always press the buffer tubes down to the bottom!

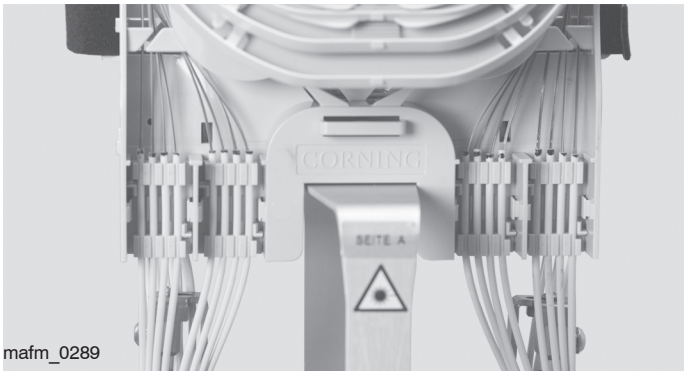

mafm_0289

6.13 For more buffer tubes use the second retaining clip.

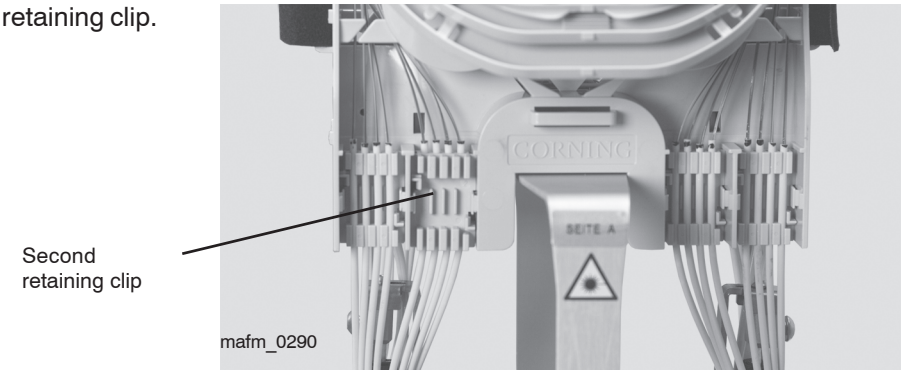

mafm_0290

6.14 Prepare and insert buffer tubes as described in under Sect. 6.8

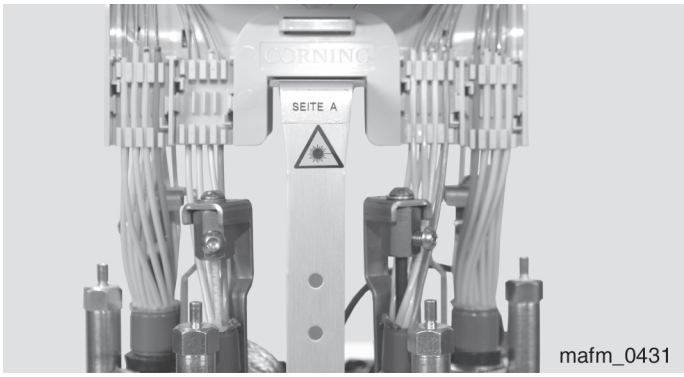

mafm_0431

6.15 On completing the work, fit on the cover, see also drawing 18/19.

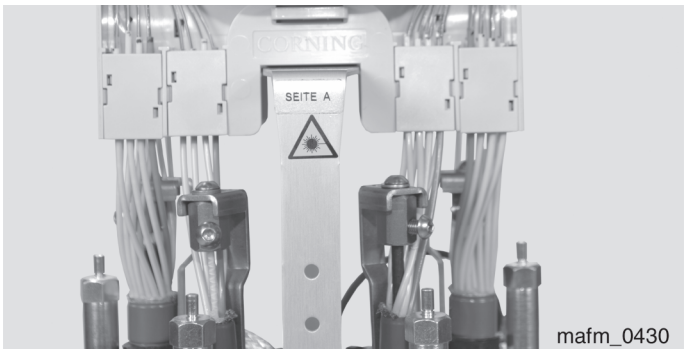

mafm_0430

Sketch 21

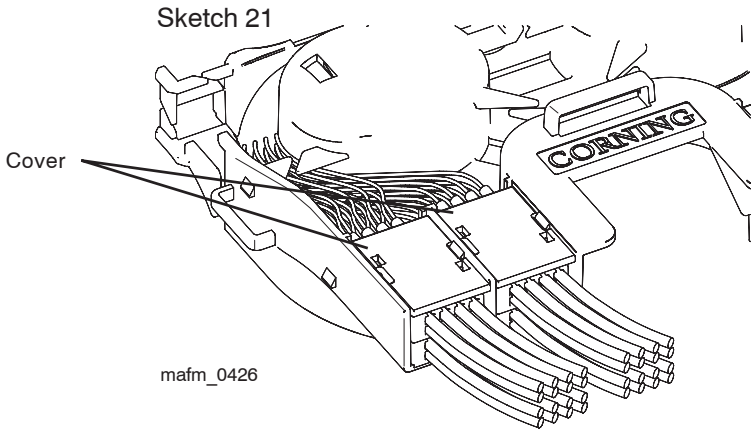

mafm_0426

6.16 Note: If necessary, mount fiber guides and tray retainers by latching them onto the mounting frame.

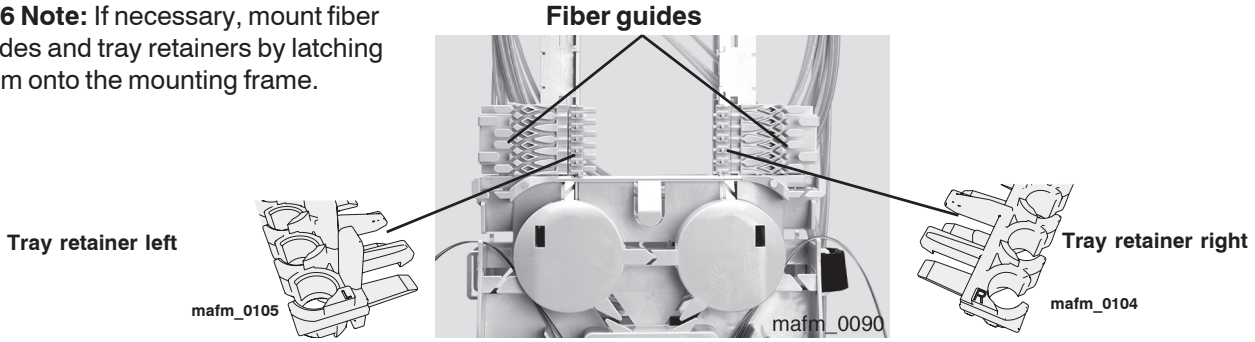

Tray retainer right

Sketch 22

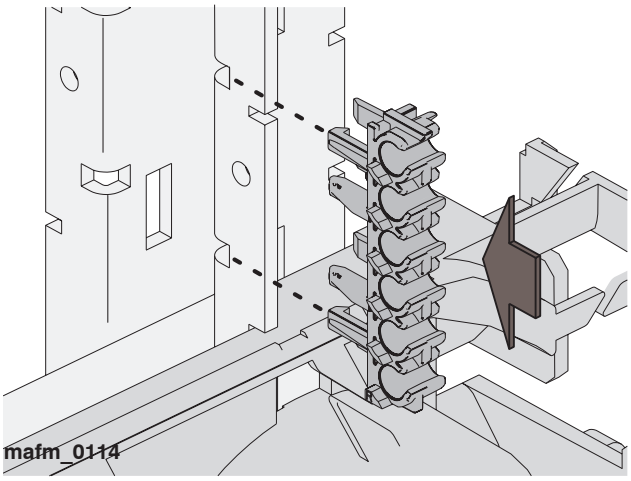

Tray retainer left

Sketch 23

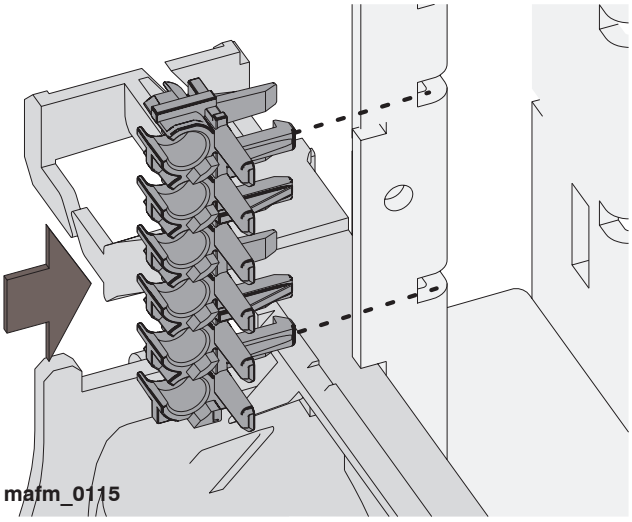

Fiber guides

Sketch 24

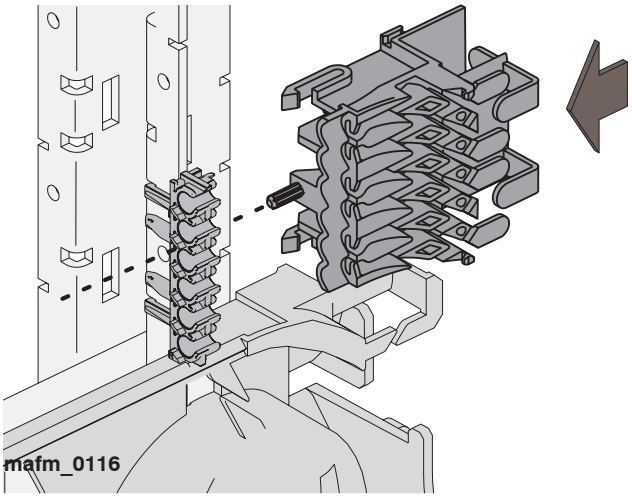

6.17 Offer the tray to the tray retainers at an angle of 45° as shown.

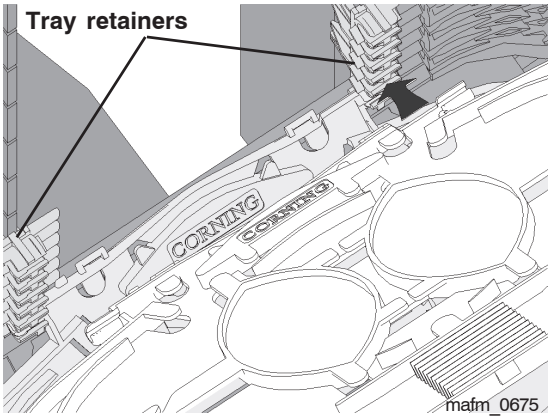

6.18 Then insert the trays in the receptacles...

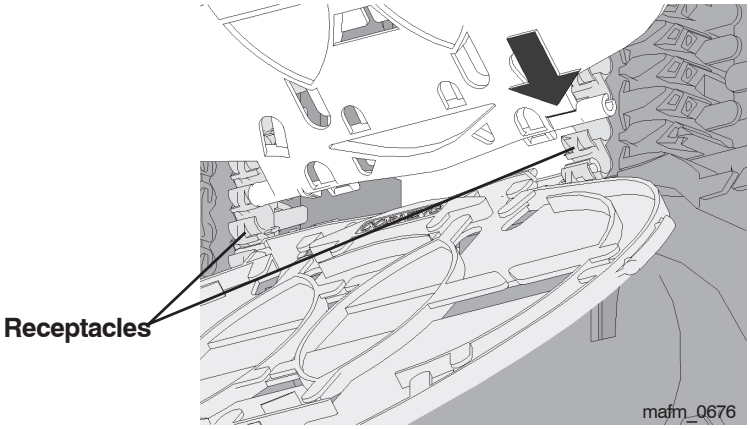

... and push them gently to the left until they latch in place.

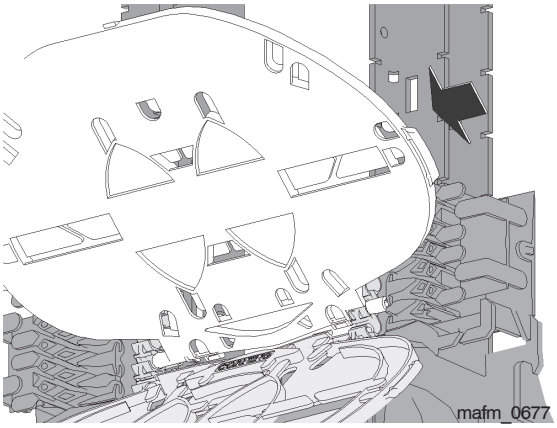

6.19 When the tray is properly latched in place, it can be flipped down.

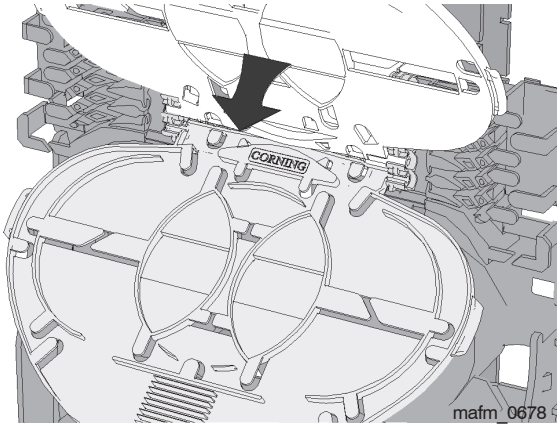

6.20 The fiber guide has 2 channels on each side:

Channel 1: For routing fibers to distant trays.

Channel 2: For routing fibers directly into the tray, or for rerouting the fiber frc channel 1 shortly before it is turned into the horizontal to the tray.

Sketch 29

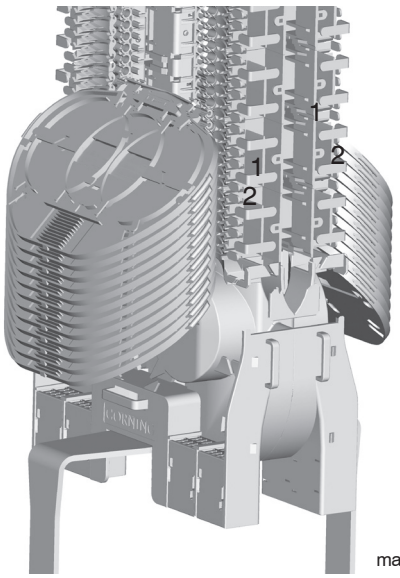

6.21 Example of fiber routing in the channels

Sketch 30

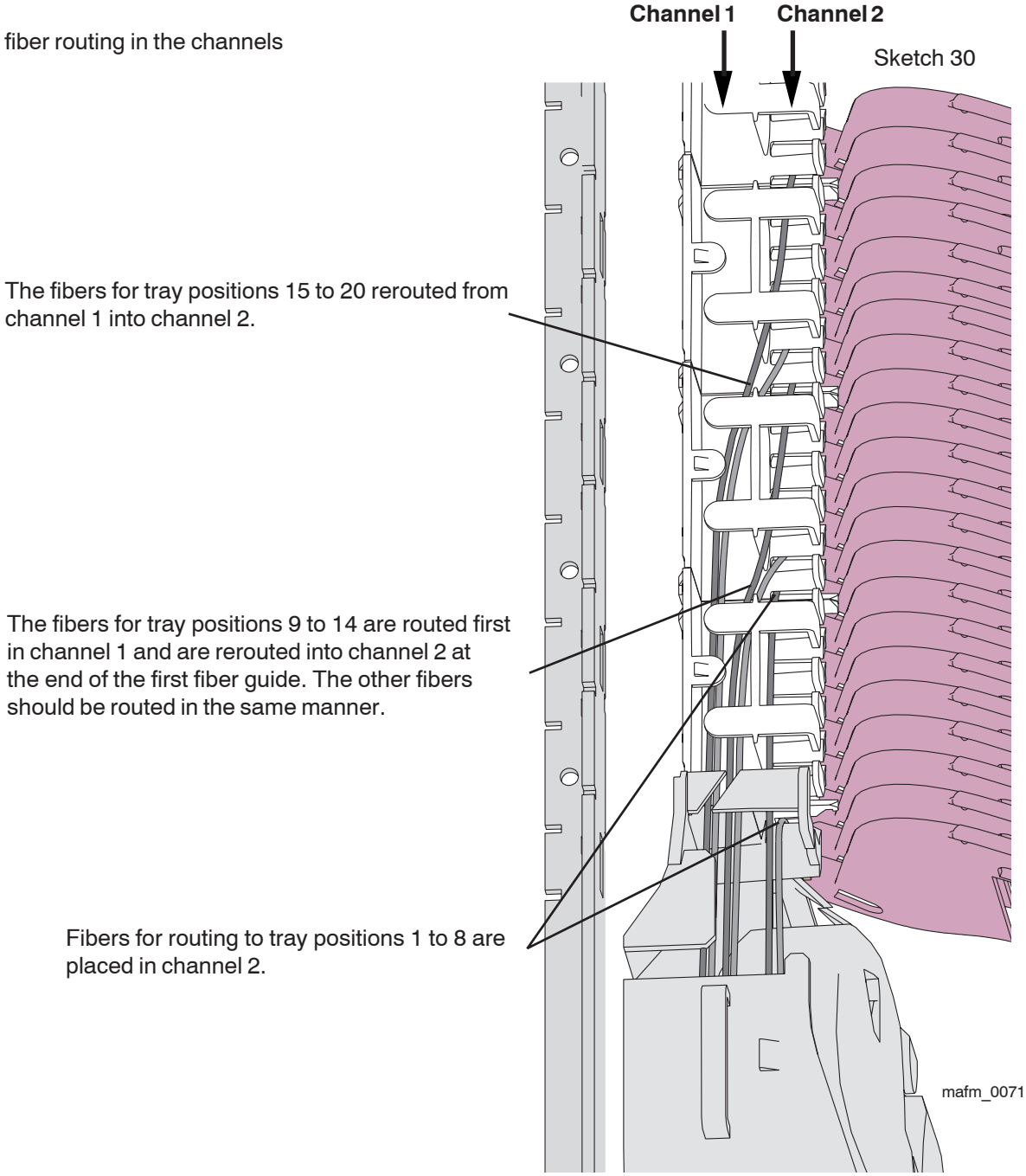

6.22 Route the required fibers via the fiber guides into the tray.

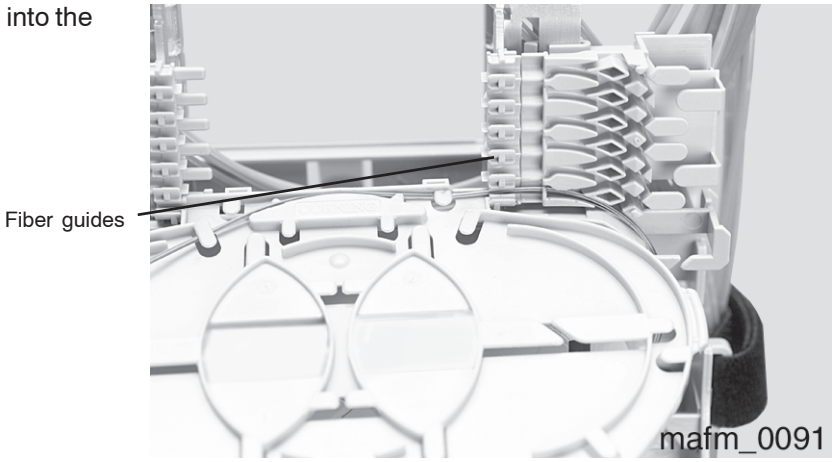

Caution: Ensure that the fibers are located under these hold-downs!

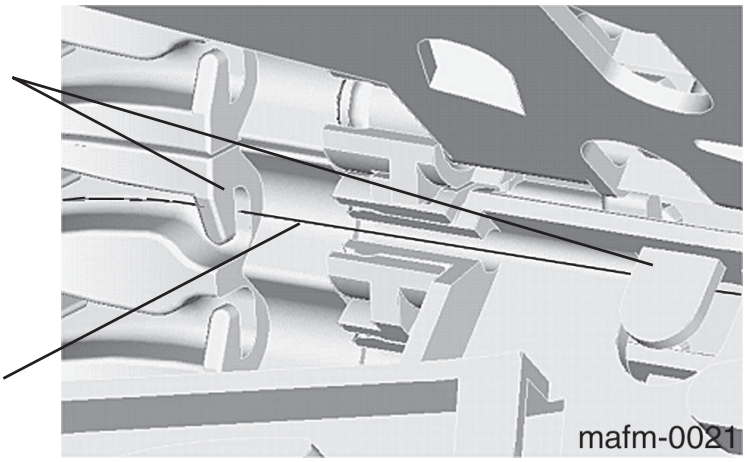

6.23 Place the fibers in the tray's slack storage and splice them as required.
Prepare the other trays in the same way.

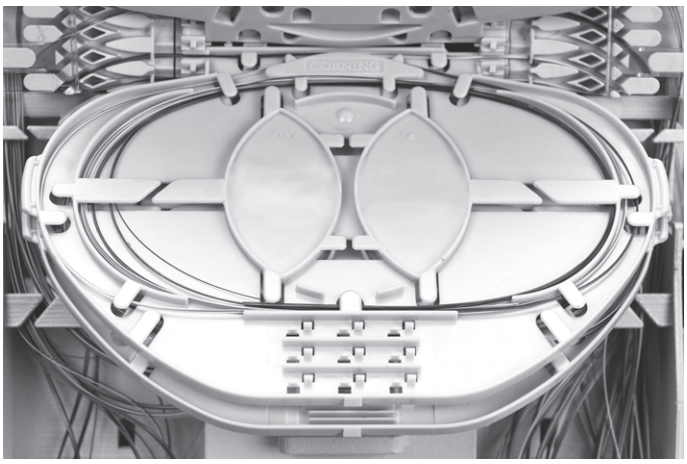

6.24 The trays can be identified by clipping on identification rings.

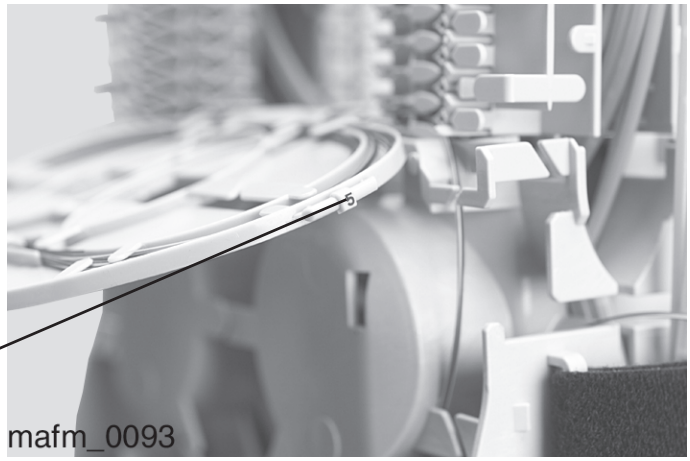

6.25 Examples of fiber routing in the tray

Fibers stored in the slack storage area.

Sketch 32

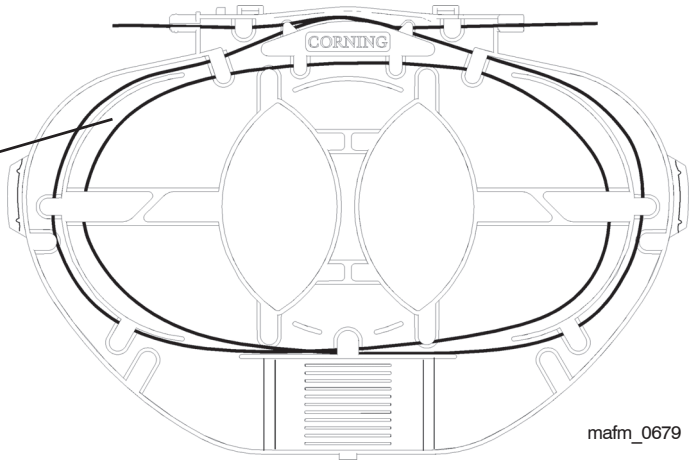

Route the incoming fiber initially in the outer channel.

Fiber routing to the splice organizer.

Sketch 33

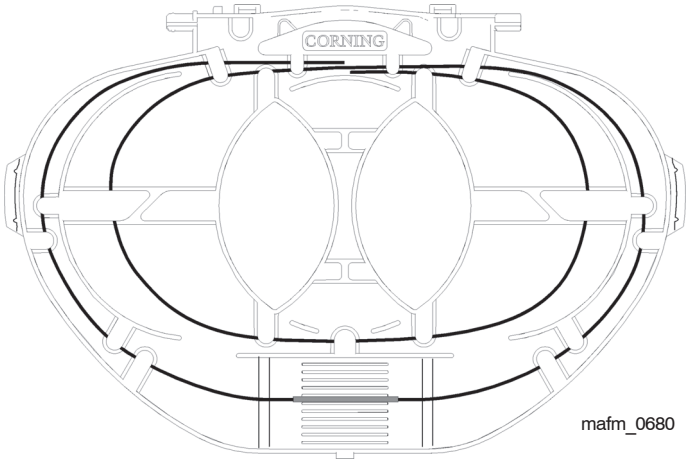

Fiber routing to change fiber direction.

Sketch 34

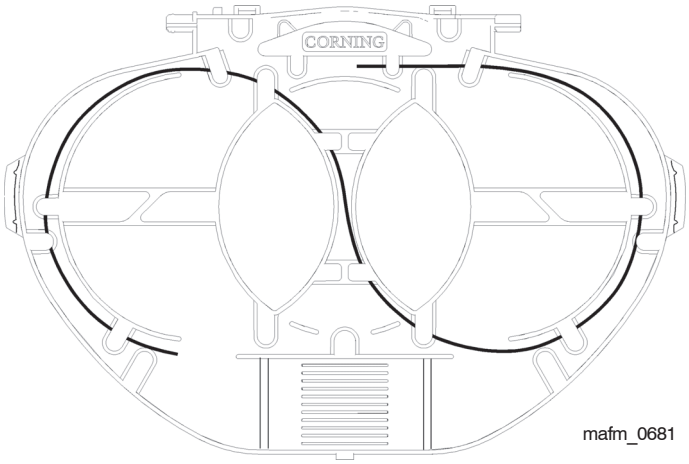

6.26 The required fibers can also be routed to the opposite side via the routing hubs on the distribution element.

Sketch 35

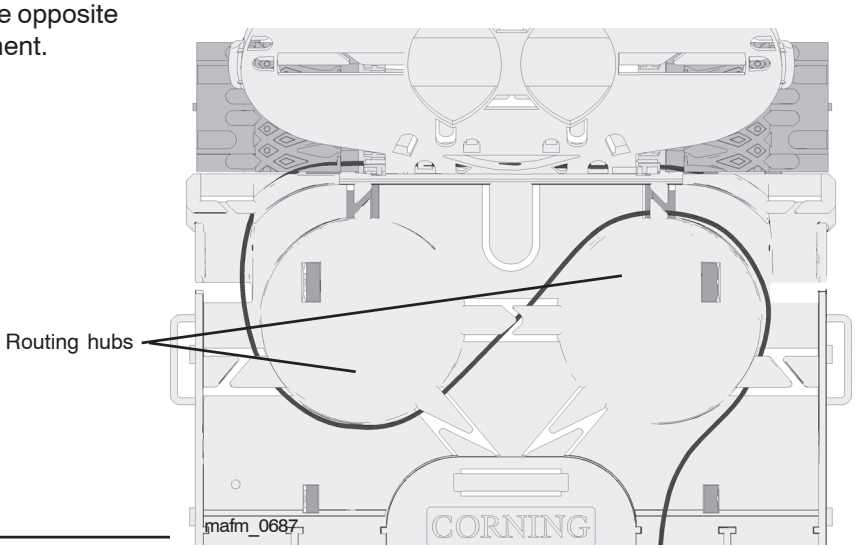

6.27 The side routing elements can also be used to reroute fibers from one tray block to the other.

Sketch 36

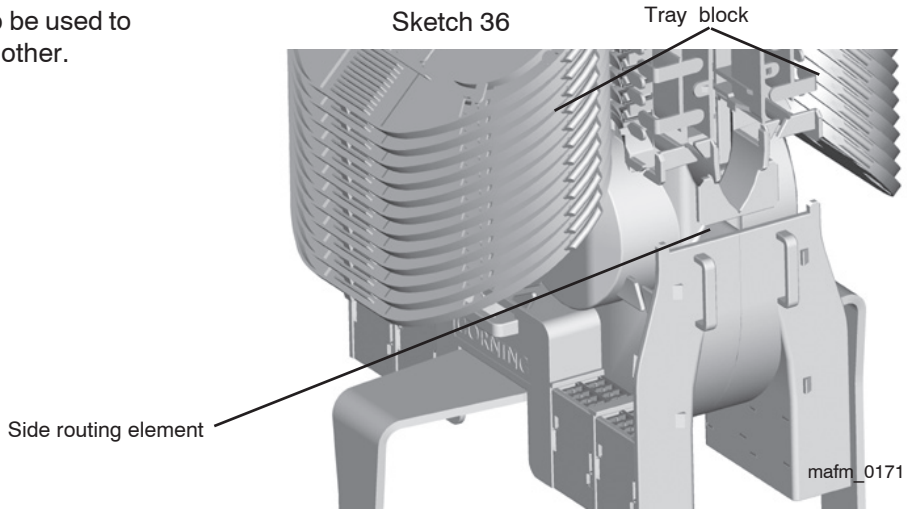

7. Closing the Closure

7.1 Mount the cover on the top splice tray. Pushing the cover with gentle pressure to the right keeps it open.

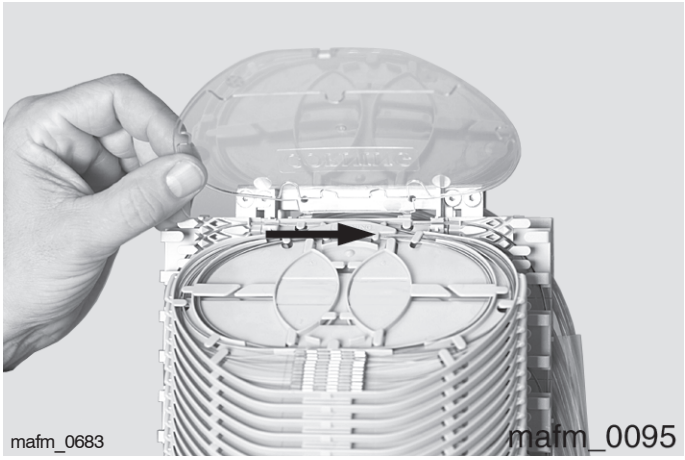

7.2 To close the cover, return it to the left applying gentle pressure and flip it down.

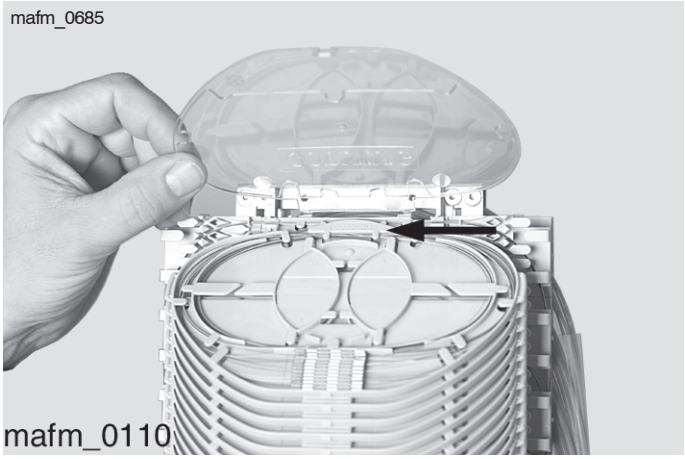

7.3 Position the the covers for the fiber guides over the nibs...

Sketch 37

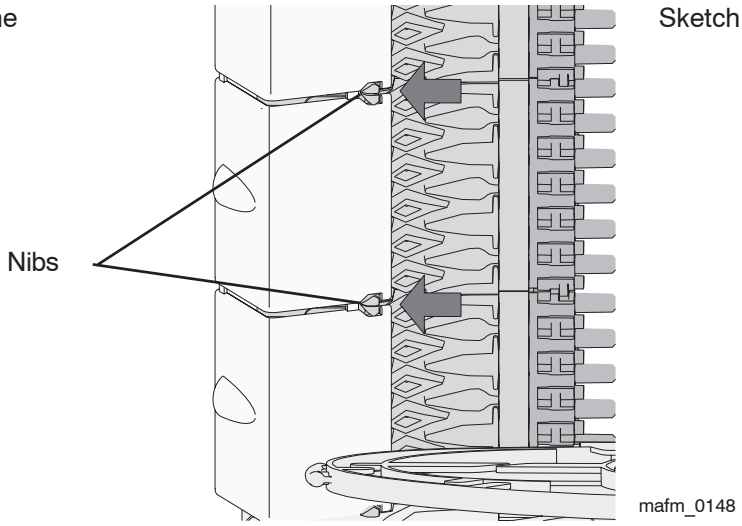

...and latch them in place applying gentle pressure.

Sketch 38

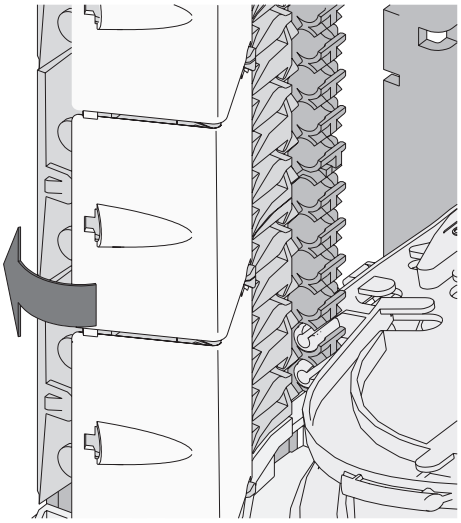

mafm_0152

7.4 Put the cover for the distribution element in position and press it on with both hands.
Re-insert the fiber tool in its retainer.

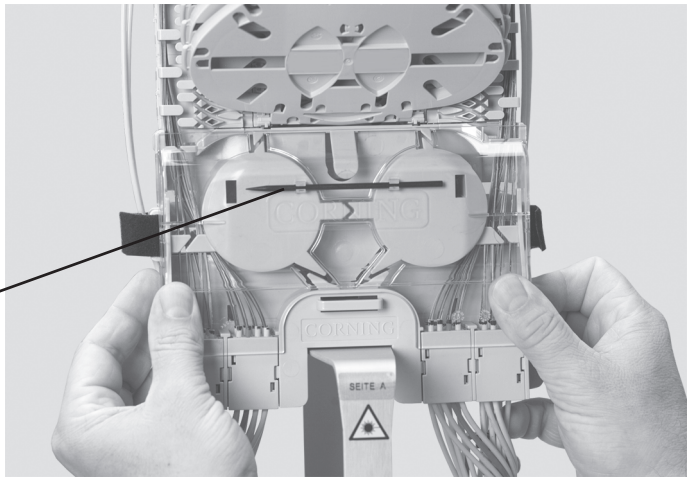

7.5 Feed the felt strip through the slot in the mounting frame and fasten it over the trays to the bottom lug of the distribution element.

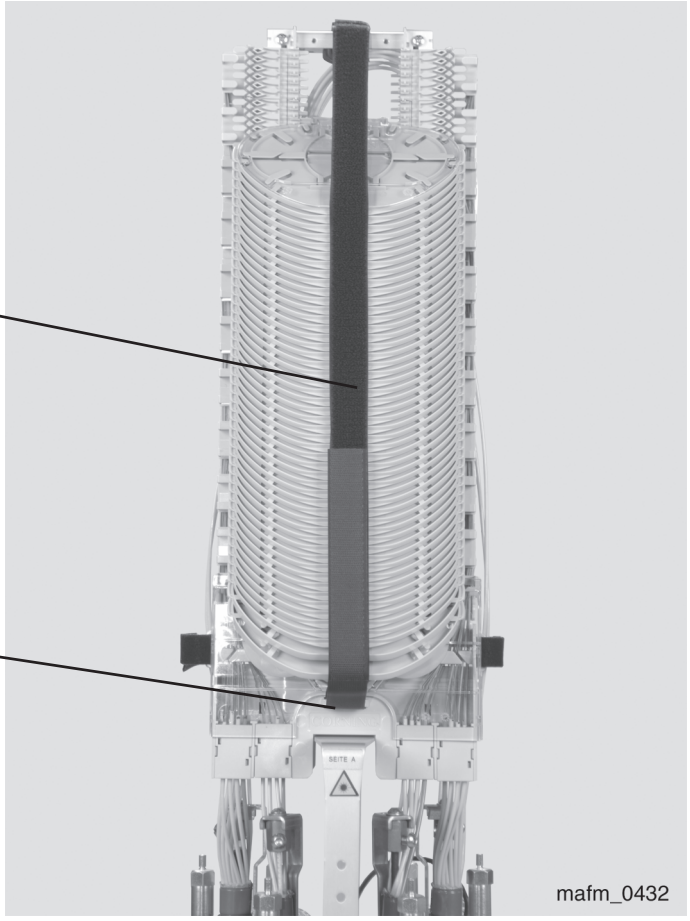

mafm_0432

Sketch 39

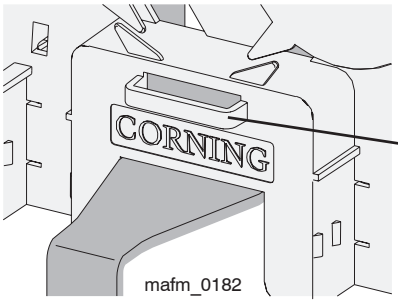

mafm_0182

7.6 Fit the sealing ring over the outer edge of of the end cap as shown and seat it in the groove...

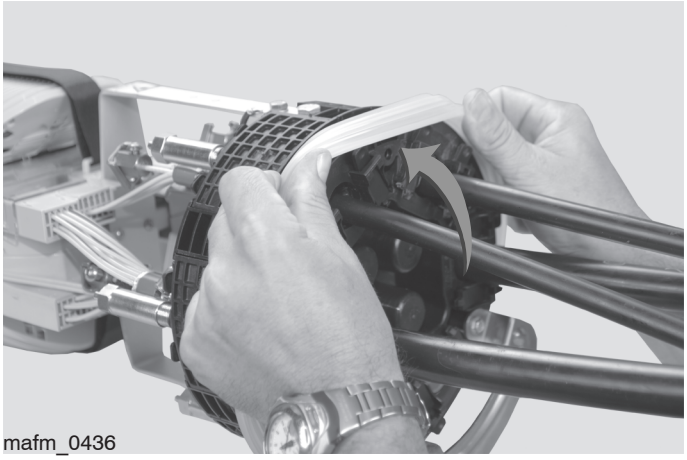

...so that the **sealing lip** with marking points to the outside of the end cap.
Important: After fitting the sealing ring, check that the lock hooks are properly seated.

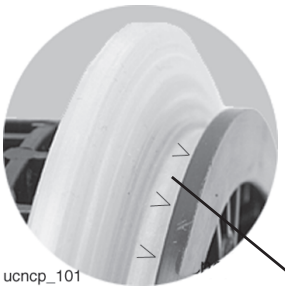

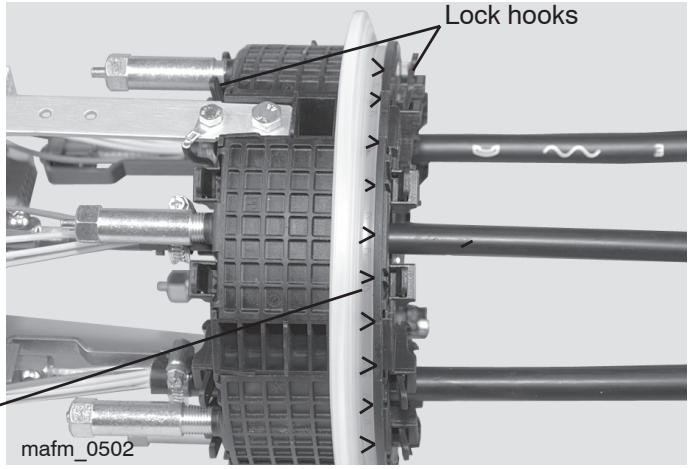

7.7 For easier closing, the closure can be set upright. Brush both sides of the sealing ring with lubricant.

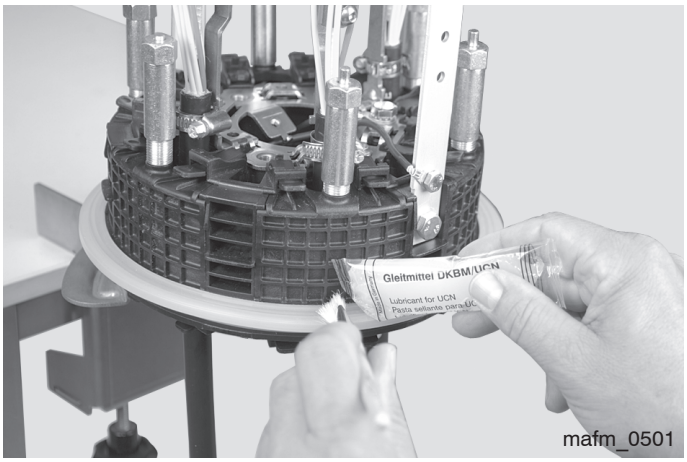

7.8 Place the clamping ring around the edge of the canister and close it with the locking screw.
Caution: Ensure that the clamping ring is correctly oriented.

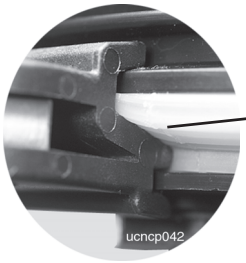

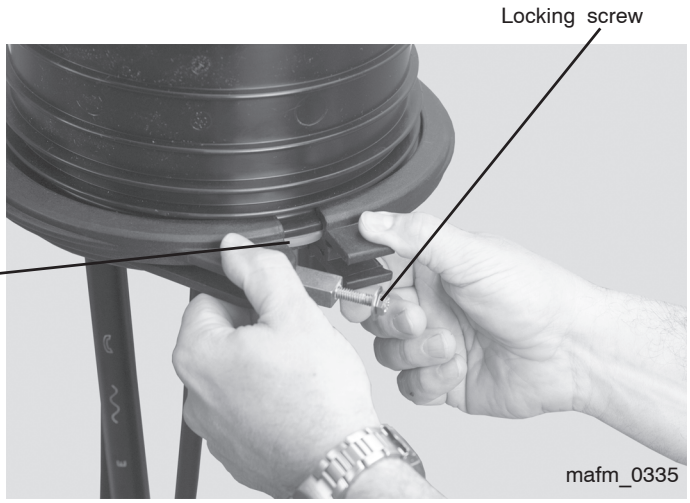

7.9 Tighten screws on both sides of the clamping ring with a wrench until fully seated.

8. Re-entering the End Cap

8.1 Remove the sealing ring.

Caution: Before opening the sealing segments, slacken the pressure screw with an open-end wrench (size 13). Then using both hands, squeeze the locks on the sealing segment together.

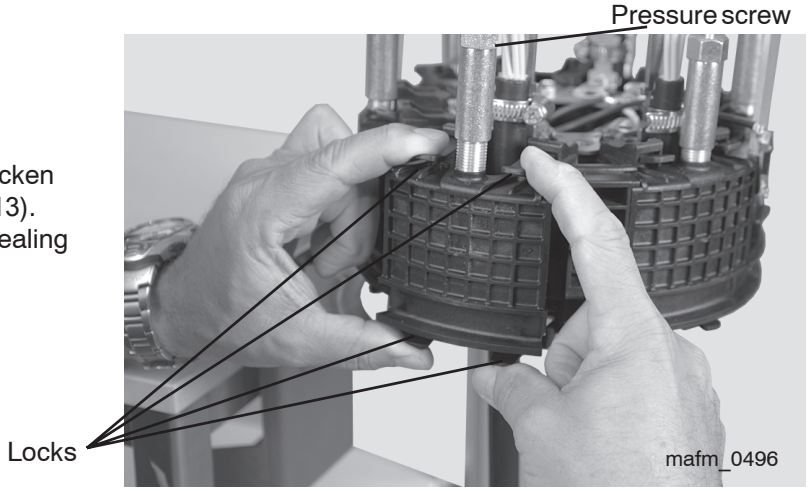

8.2 Pull off the sealing segment carefully to avoid damaging the seal.

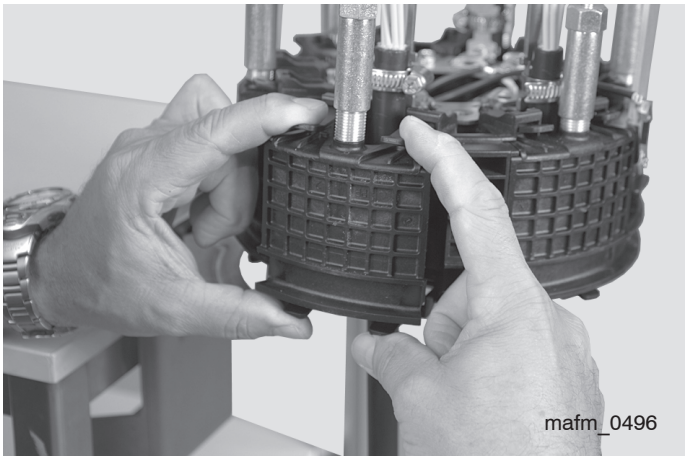

8.3 To reclose the end cap, it is necessary to slacken the pressure screw completely.

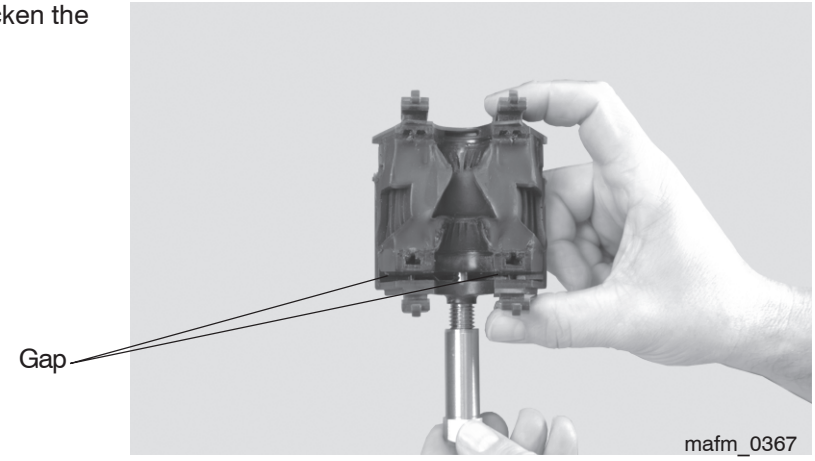

8.4 Then press lightly on the seal to close the gap on the sealing segment.
See also Sect. 8.3

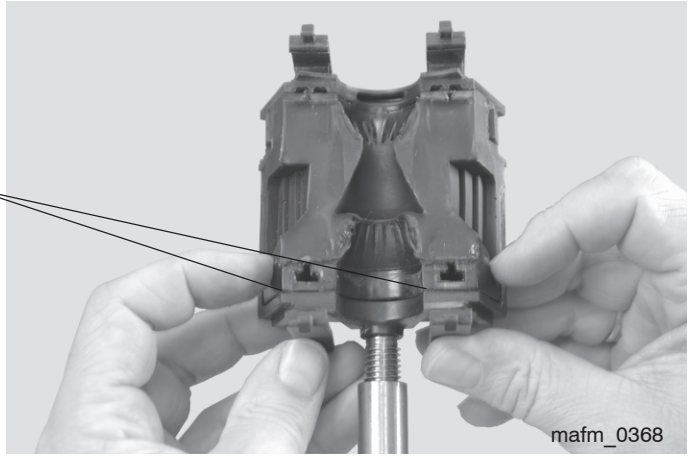

9. Replacing the Sealing Segments (Inner and Outer Sealing Segment) on Contamination or Damage

If the sealing segments are contaminated or damaged, they should be replaced (accessories, ordered separately).

9.1 Replacing the Inner Sealing Segment

Pull the inner sealing segment in the end cap forwards and use a screwdriver to push it outwards until it is completely removed.

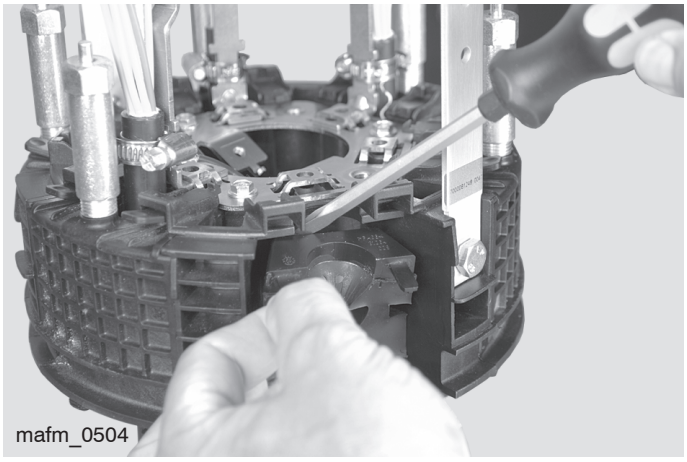

Insert the new inner sealing segment in the end cap with the cone tip pointing downwards and press on it until until it is firmly seated.

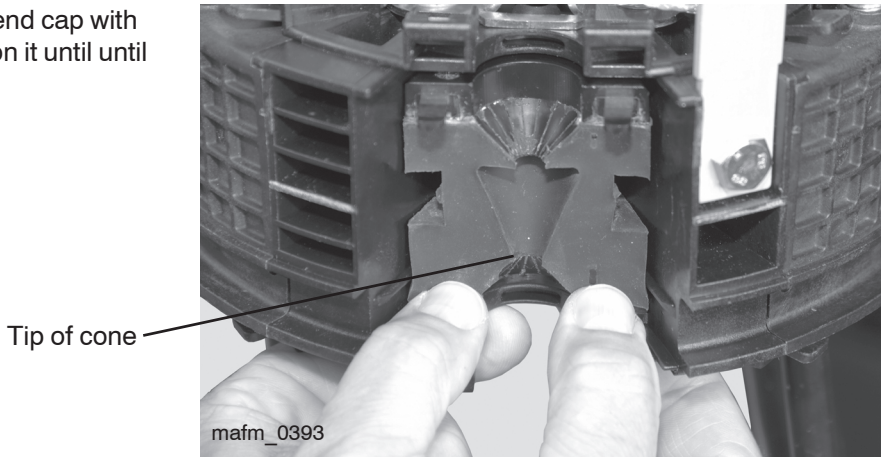

9.2 Replacing the Outer Sealing Segment

The outer sealing segment must be completely replaced by a new one.

10. Later Installation of a Branch Cable

The installation is carried out as described in the procedure starting at Sect. 4.

Disposal Note

Disposal of the products and their packaging must be
carried out in strict compliance with the local laws currently in force.

Disclaimer

Corning Cable Systems GmbH & Co. KG accepts no liability for any damage arising from improper use of the product. The extent of any liability in specific instances shall be limited to the General Terms and Conditions of Sale from Corning Cable Systems GmbH & Co. KG.
This product is state of the art.

Corning Cable Systems GmbH & Co. KG

Profilstrasse 4, D-58093 Hagen
++ 49-2331-357-0 Fax: 357-1118
Internet: www.corning.com/cablesystems/de
Internet: www.corning.com/cablesystems/europe

Printed in the Federal Republic of Germany on oxygen-bleached paper.
Subject to availability. Right of modification reserved.
Order No.: S46998-A19-P422

05.12.2011